WASHING MACHINE DRUM TYPE

Basic Model : WF448AAW/XAA
(PURPLE PROJECT)

Model Name : WF419***
WF409***
(ACE PROJECT)

Model Code : WF419AAW/XAA
WF409SNL/XAC

SERVICE Manual

WASHING MACHINE (DRUM)

WF419***

WF409***

CONTENTS

1. Safety Instructions
2. Features and Specifications
3. Disassembly and Reassembly
4. Troubleshooting
5. Exploded Views and Parts List
6. PCB Diagram
7. Wiring Diagram
8. Schematic Diagram

Refer to the service manual in the GSPN (see the rear cover) for the more information.

CONTENTS

1. Safety instructions . . . 1
1-1. Safety instructions for service engineers . . . 1

2. Features and Specifications . . . 5
2-1. Features . . . 5
2-2. Specifications . . . 7
2-3. Comparing specifications with existing models . . . 8
2-4. Options specifications . . . 9

3. Disassembly and Reassembly . . . 10
3-1. Tools for disassembly and reassembly . . . 10
3-2. Standard disassembly drawings . . . 11

4. Troubleshooting . . . 21
4-1. Error modes . . . 21
4-2. Corrective actions for each error code . . . 25

5. Exploded views and Parts list . . . 31
5-1. MAIN . . . 32
5-2. FRAME & COVER PARTS . . . 36
5-3. ASS'Y TUB & DRUM . . . 42
5-4. ASS'Y FRAME FRONT & DOOR . . . 48
5-5. ASS'Y PANEL CONTROL (BEST: WF419***) . . . 52
5-6. ASS'Y PANEL CONTROL (BETTER: WF409***) . . . 54
5-7. ASS'Y DRAWER . . . 56
5-8. ASS'Y HOUSING DRAWER . . . 60
5-9. SMALL PARTS . . . 64
5-10. PARTS LIST (OTHERS PARTS) . . . 66
5-11. PARTS LIST (SCREW PARTS) . . . 68

6. PCB diagram . . . 70
6-1. Main PCB . . . 70
6-2. Connector and Relay Port Part Detailed Manual (Main PCB) . . . 71
6-3. Sub PCB (Best : WF419***) . . . 72
6-4. Connector Port Part Detailed Manual (Sub PCB - Best : WF419***) . . . 73
6-5. Sub PCB (Better : WF409***) . . . 74
6-6. Connector Port Part Detailed Manual (Sub PCB - Better : WF409***) . . . 75

7. Wiring diagram . . . 76
7-1. Wiring diagram . . . 76

8. Schematic diagram . . . 77
8-1. Main control . . . 77
8-2. Sub control (Best : WF419***) . . . 78
8-3. Sub control (Better : WF409***) . . . 79

GSPN (GLOBAL SERVICE PARTNER NETWORK)

Area	Web Site
North America	http://service.samsungportal.com
Latin America	http://latin.samsungportal.com
CIS	http://cis.samsungportal.com
Europe	http://europe.samsungportal.com
China	http://china.samsungportal.com
Asia	http://asia.samsungportal.com
Mideast & Africa	http://mea.samsungportal.com

This Service Manual is a property of Samsung Electronics Co.,Ltd.
Any unauthorized use of Manual can be punished under applicable International and/or domestic law.

© 2009 Samsung Electronics Co.,Ltd. All rights reserved.

Printed in Korea
Code No.: DC68-02765A-01

1. SAFETY INSTRUCTIONS

1-1. SAFETY INSTRUCTIONS FOR SERVICE ENGINEERS

► Be sure to observe the following instructions to operate the product correctly and safety to prevent possible accidents and hazards while servicing.

► Two types of safety symbols, Warning and Caution, are used in the safety instructions.

⚠ WARNING	**Hazards or unsafe practices that may result in severe personal injury or death.**
⚠ CAUTION	**Hazards or unsafe practices that may result in minor personal injury or property damage.**

⚠ WARNING BEFORE SERVICING

- (When servicing electrical parts or harnesses) Make sure to disconnect the power plug before servicing.
  ✔ Failing to do so may result in a risk of electric shock.

- Do not allow consumers to connect several appliances to a single power outlet at the same time.
  ✔ There is a risk of fire due to overheating.

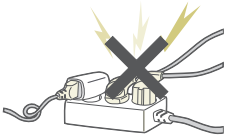

- When removing the power cord, make sure to hold the power plug when pulling the plug from the outlet.
  ✔ Failing to do so may damage the plug and result in fire or electric shock.

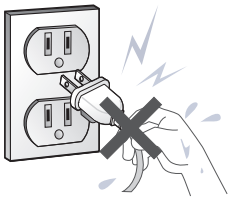

- When the washing machine is not being used, make sure to disconnect the power plug from the power outlet.
  ✔ Failing to do so may result in electric shock or fire due to lightning.

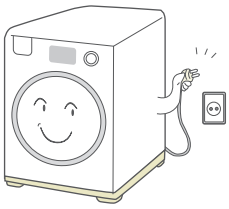

- Do not place or use gasoline, thinners, alcohol, or other flammable or explosive substances near the washing machine.
  ✔ There is a risk of explosion and fire caused from electric sparks.

⚠ WARNING WHILE SERVICING

- Check if the power plug and outlet are damaged, flattened, cut or otherwise degraded.
  - ✔ If faulty, replace it immediately.
    Failing to do so may result in electric shock or fire.

- Completely remove any dust or foreign material from the housing, wiring and connection parts.
  - ✔ This will prevent a risk of fire due to tracking and electrical hazard..

- When connecting wires, make sure to connect them using the relevant connectors and check that they are completely properly.
  - ✔ If tape is used instead of the connectors, it may cause fire due to tracking.

- Make sure to discharge the PBA power terminals before starting the service.
  - ✔ Failing to do so may result in a high voltage electric shock.

- When replacing the heater, make sure to fasten the nut after ensuring that it is inserted into the bracket-heater.
  - ✔ If not inserted into the bracket-heater, it touches the drum and causes noise and electric leakage.

⚠ WARNING AFTER SERVICING

- Check the wiring.
  - ✔ Ensure that no wire touches a rotating part or a sharpened part of the electrical harness.

- Check for any water leakage.
  - ✔ Perform a test run for the washing machine using the standard course and check whether there is any water leakage through the floor section or the pipes.

- Do not allow consumers to repair or service any part of the washing machine themselves.
  - ✔ This may result in personal injury and shorten the product lifetime.

- If it seems that grounding is needed due to water or moisture, make sure to run grounding wires.
  (Check the grounding of the power outlet, and additionally ground it to a metallic water pipe.)
  - ✔ Failing to do so may result in electric shock due to electric leakage.

  [Running a grounding wire]
  - Twist a grounding wire (copper wire) two or three times around the tap.
  - If you connect the grounding wire to a copperplate, bury it 75 cm under the earth in a place with a lot of moisture.
    - ⚠ Do not connect the grounding wire to a gas pipe, plastic water pipe or telephone wire. There is a risk of electric shock or explosion.

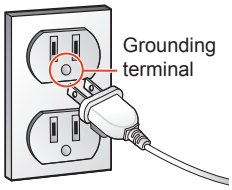

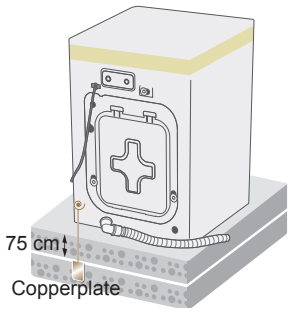

⚠ CAUTION BEFORE SERVICING

- Do not sprinkle water onto the washing machine directly when cleaning it.
  - ✔ This may result in electric shock or fire, and may shorten the product lifetime.

- Do not place any containers with water on the washing machine.
  - ✔ If the water is spilled, it may result in electric shock or fire. This will also shorten the product lifetime.

- Do not install the washing machine in a location exposed to snow or rain.
  - ✔ This may result in electric shock or fire, and shorten the product lifetime.

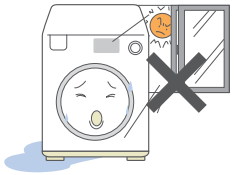

- Do not press a control button using a sharp tool or object.
  - ✔ This may result in electric shock or damage to the product.

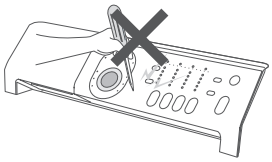

⚠ CAUTION WHILE SERVICING

- When wiring a harness, make sure to seal it completely so no liquid can enter.
  - ✔ Make sure that they do not break when force is exerted.

- Check if there is any residue that shows that liquid entered the electric parts or harnesses.
  - ✔ If any liquid has entered into a part, replace it or completely remove any remaining moisture from it.

- If you need to place the washing machine on its back for servicing purposes, place a support(s) on the floor and lay it down carefully so its side is on the floor.
  - ✔ Do not lay it down on its front. This may result in the inside tub damaging parts.

⚠ CAUTION AFTER SERVICING

- Check the assembled status of the parts.
  - ✔ Now is a good time to inspect your work. Review all connections and wiring, including mounting hardware.

- Check the insulation resistance.
  - ✔ Disconnect the power cord from the power outlet and measure the insulation resistance between the power plug and the grounding wire of the washing machine. The value must be greater than 10MΩ when measured with a 500V DC Megger

- Check whether the washing machine is level the floor with respect to the original position of the washing machine prior to service.
  By doing this now will reduce for the need of customer dissatisfaction and redo call.
  - ✔ Vibrations can shorten the lifetime of the product.

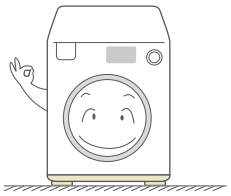

2. FEATURES AND SPECIFICATIONS

2-1. FEATURES

Features	Description
Active Fresh™ Sanitization (Only model WF419)**	• The winning combination! Samsung's silver nano technology combines the sanitizing effect of silver with state-of-the art science for the ultimate in clean. Two plates of 99.9% pure silver are converted into silver ions through electrolysis. They penetrate deep into the wash water to kill bacteria and fungi. Even in cold, bleach-less water, the silver particles kill 99.9% of odor causing bacteria for a "super clean" wash. So washing in cold water is energy efficient and better for your clothes. • Samsung's unique technology generates silver ions that remove bacteria and fungi, and creates an invisible shield that protects your clothes from unwanted odors until your next wash. Using an ancient and proven purification technique so simple, yet so advanced, it removes microbes even in cold water. • Effect of Silver Wash System - Keeps Stored Clothes Fresh The Ag+ Silver (Nano) Technology anti-bacterial effect keeps fabric free from odor-causing micro-organisms for up to one month, without the use of strong chemical cleaners. There's no need to worry about musty-smelling clothes even if they remain unused for a long period. - Makes Shapeless Garments a Thing of the Past High temperatures and harsh bleaches can damage and discolor your clothes. The Ag+ Silver (Nano) Technology helps your clothes last longer, without stretching, shrinking, pilling or fading.
VRT Steam™ (Only model WF419)**	• Superior washing performance • Loosen up grime/dirt easily with the tough of a button. • Saving time & energy providing extraordinary cleaning power.
Quietest VRT™	• Lowest Vibration & Noise • Samsung's VRT™ provides smooth operation at spin speeds up to 1200 rpm. • 2nd floor as well as main floor installation available 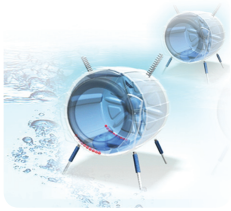
High efficiency energy & Water saving	• Washing with Samsung's Activ Fresh™, even in cold water, sanitizes the laundry thereby saving 92% of the energy normally used with hot water sanitization.
Direct drive inverter motor	• The power to handle anything! Our direct-drive inverter motor delivers power right to the washer tub from a variable speed, reversible motor. A beltless direct-drive motor generates a higher spin speed of 1200 rpms for more effective, quiet operation. The washer also has fewer moving parts, meaning fewer repairs.
Woolmark certified	• The machine wash wool cycle on the Samsung Activ Fresh™ machines has been tested and has passed the required Woolmark Company specification for machine washable wool products. Fabrics should be washed according to the instructions on the garment label as specified by Woolmark and Samsung.

Features	Description
Pedestal with storage drawers **(Model No : WE357A7P/E/W)**	• An optional 15” pedestal is available to raise the washer for easier loading and unloading. It also offers a built-in storage drawer that can hold a 100 oz. bottle of detergent 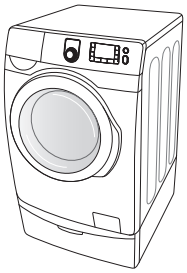
Stacking **(Model No : SK-5A/XAA)**	• Samsung washers and dryers can be stacked to maximize usable space. An optional stacking kit is available for purchase from your Samsung retailer. 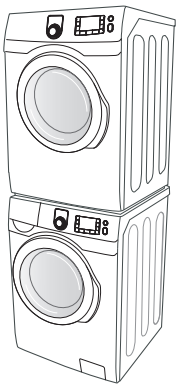
Diamond Drum	• The washing performance has improved and potential damage to the clothing has been minimized. (The size of the holes on the diamond drum has been reduced for minimizing damage to the clothing/garment.) - The embossed wall of the drum serves as a washboard, dramatically increasing the washing performance compared with existing drum washing machines, which uses the power of the difference in elevation only. - The size of holes has been reduced drastically, maintaining the optimal wash performance (Washing Cost 1.0) while saving on water and electricity required for washing. - The structure of the holes on the diamond drum was redesigned to minimize potential damage to the clothing. 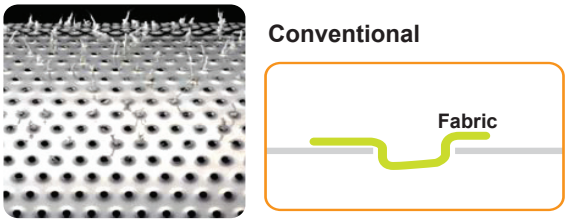 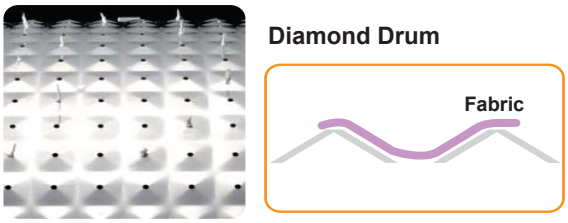

2-2. SPECIFICATIONS

Model		WF419*** / WF409***	
Wash type		Front loading type	
Dimension (Inches / mm)	A: High-Overall	39” / 991 mm	
	B: Width	27” / 686 mm	
	C: Depth with door open 90º	51.7” / 1314 mm	
	D: Depth	31.9” / 811 mm	
Water pressure		20 ~ 116 psi (137 ~ 800 kpa)	
Weight		99 Kg	
Capacity		4.3 cu.ft	
Power consumption	Washing	120 V	300 W
	Washing and heating	120 V	1100 W
	Spin	120 V	700 W
	Drain	120 V	80 W
Spin revolution	rpm	1200 RPM (1150 RPM)	

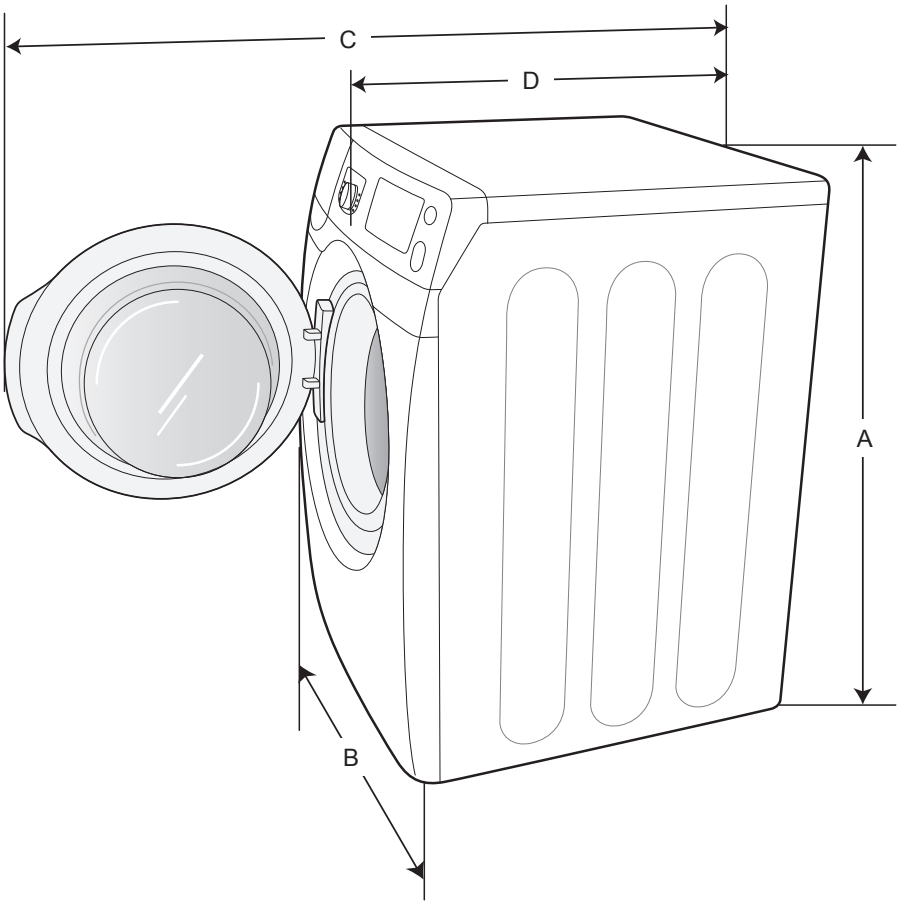

2-3. COMPARING SPECIFICATIONS WITH EXISTING MODELS

Grade		ACE BEST	ACE BETTER	PURPLE
Model Name		WF419***	WF409***	WF448AAW WF448AAE WF448AAP WF438AAR WF428AAW WF428AAL
Image				
Capacity		4.3 cu.ft	4.3 cu.ft	4.5 cu.ft
Size (W x D x H)		27”(686mm) x 31.9”(811mm) x 39”(991mm)	27”(686mm) x 31.9”(811mm) x 39”(991mm)	27”(686mm) x 31.9”(811mm) x 39”(991mm)
Energy	Rating Voltage	120V/60Hz	120V/60Hz	120V/60Hz
	Washing Watage	300 W	300 W	250 W
	Washing & Heating	1100 W	1100 W	1100 W
	Spin Watage	700 W	700 W	600 W
	Drain Watage	80 W	80 W	80 W
	Annual Energy Consumption (Kwh/Year)	109	109	166
Main Spec	Drum Volume	104 ℓ	104 ℓ	109 ℓ
	RPM (Max Spin Speed)	1200	1200	1300
	MOTOR	DD	DD	DD
	MEF	2.86	2.86	2.68
	WCF	3.1	3.1	3.4
USP	VRT (Lowest Vibration & Noise)	O	O	O
	Steam Kit	O	X	O
	Silver Wash	O	X	O
	Diamond Drum	O	O	O
	Internal Heater	O	O	O
	Circulation Pump	O	O	O
	Interial Drum Light	X	X	O
Design	Display Type	LED	LED	LED + 2.5” LCD
	Display Color (LED)	RED	RED	White LCD + Red
	Door Trim	Chrome	Imperial Silver	Chrome
	Frame	W : White U : Blue-Steel	L : Onyx Blue	W : White E : Copper P : Stainless platium R : Tango red L : Onyx blue

3. DISASSEMBLY AND REASSEMBLY

3-1. TOOLS FOR DISASSEMBLY AND REASSEMBLY

Tool		Type	Remarks
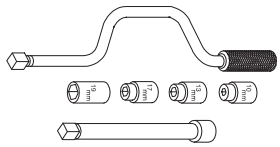	Socket Wrench with 6” Extension	10mm 13mm 19mm	Heater (1) Motor (1), Balance (5), 2 holes of each left and right of the shock absorber 1 Pulley hole
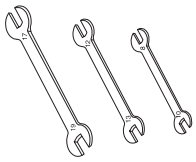	Open End wrench	10mm 13mm 19mm	Replaceable for the box driver. Since the bolt runs idle when the box driver is used, use the box driver 17mm.
	Vice pliers		Tool to protect the idle and abrasion of the bolt for the box driver.
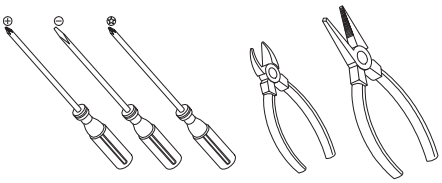	Others (Driver, Nipper, Long nose)		General tools for the after service.
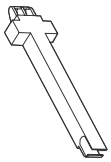	JIG for the Tub		1 (Disassemble and Assemble)

3-2. STANDARD DISASSEMBLY DRAWINGS

► This is a standard disassembly diagram and may differ from the actual product.
Use this material as a reference when disassembling and reassembling the product.

Part	Figure	Description
ASSY COVER TOP	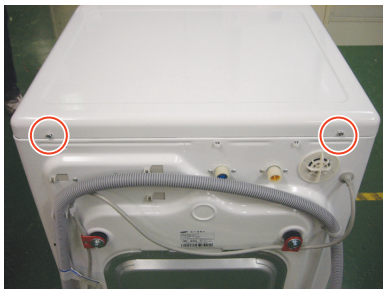	1. Remove the two screws holding the Top Cover at the back of the unit.
		2. Remove the top-cover by lifting it up after pulling it back about 15mm.
	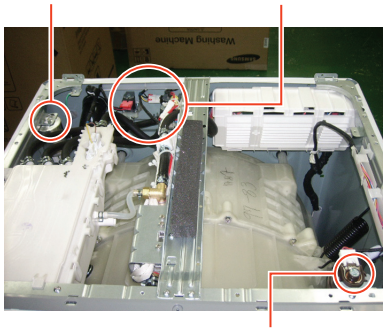	3. With the top cover removed you will now have access to service the Water pressure sensor, EMI Noise Filter, Hot and Cold Water Valves, Steam ASSY, Hose Draw ASSY, and Main PCB ASSY.

Part	Figure	Description
MAIN-PCB AND SUB-PCB PANEL	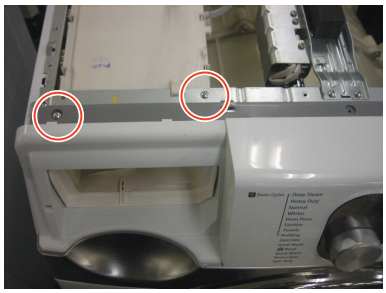	1. Remove the 2 screws at the top of the ASSY-PANEL CONTROL.
	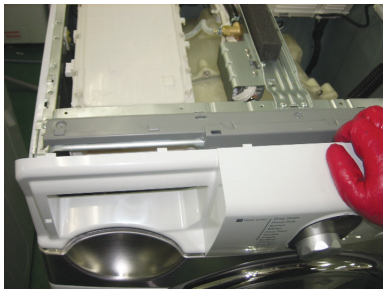	2. Hold the ASSY-PANEL CONTROL while pulling it upwards and release the hook to remove it.
	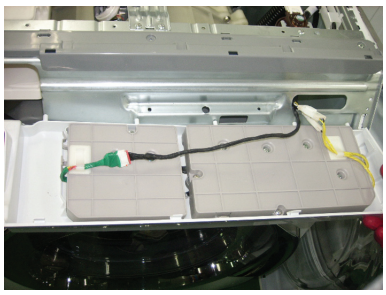	3. Carefully disconnect the two wiring connectors by hand.
	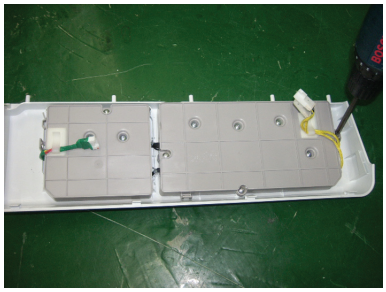	4. Remove the 9 screws holding the PCB and release the hooks on both sides to remove the PCB for repair / replacement.

Part	Figure	Description
FRAME FRONT		1. Separate the Wire-Diaphragm from the Front-Frame and remove the Diaphragm.
	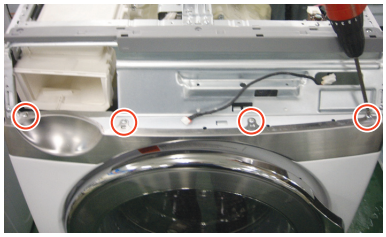	2. Remove the 4 screws holding the FRAME-FRONT.
		3. Remove the 4 screws holding the GUIDE-COVER FILTER of the FRAME-FRONT.
		4. Untie the hose.
	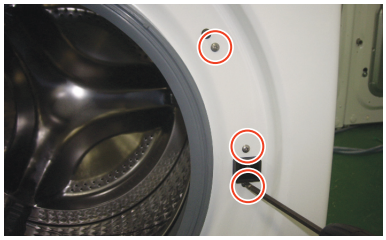	5. Remove the 3 screws.
	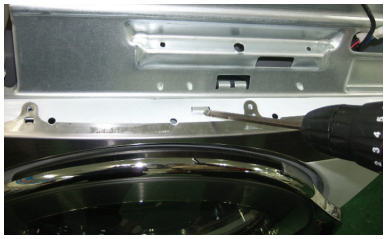	6. Push the hook.
	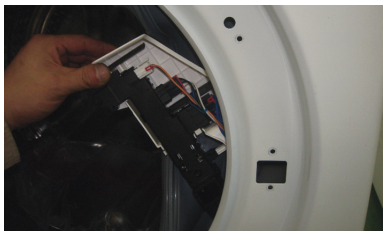	7. Disconnect the terminal for the DOOR-LOCK switch.

Part	Figure	Description
COVER-BACK	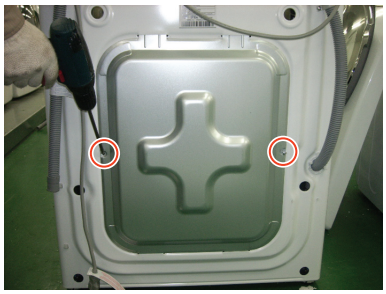	• Remove the 2 screws holding the Back-Cover at the back of the washing machine
STEAMER (Only model WF419**)	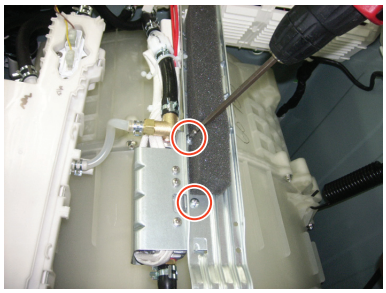	1. Remove the 2 screws holding the Guide Wire at the upper of the washing machine.
	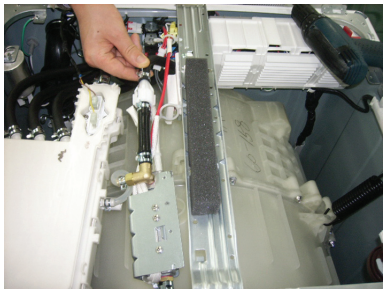	2. Disconnect the terminal for the steamer
DD MOTOR		1. Remove the one bolt for the DD Motor.
	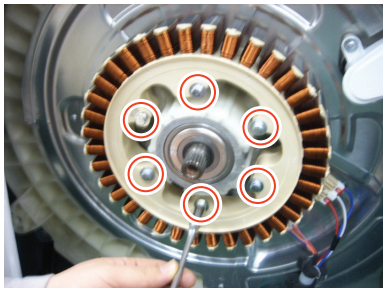	2. Remove the 6 screws.

Part	Figure	Description
WATER SUPPLY VALVE	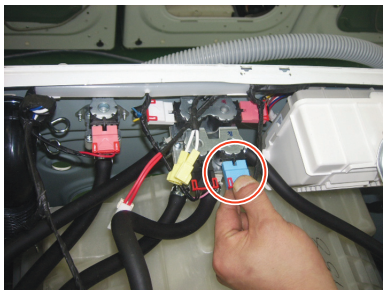	1. Remove the Top Assy-Plate. 2. Disconnect the water supply valve wire connector.
	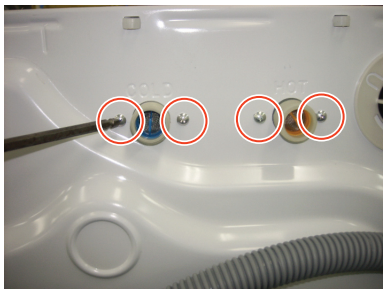	3. Remove the 4 screws holding the water supply valve.
WATER LEVEL SENSOR (The Bracket type)	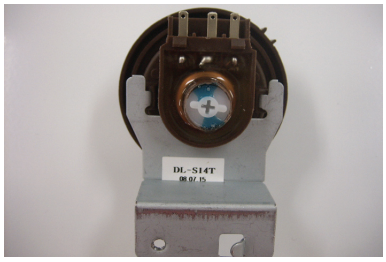	**The Bracket type water level sensor**
	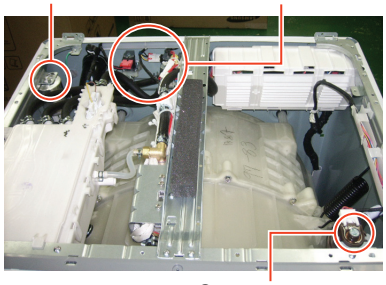	1. Separate the Top Assy-Plate.
	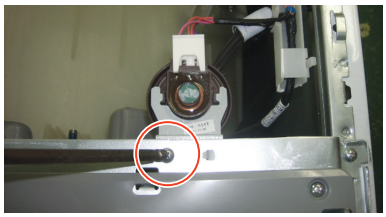	2. Remove the screw holding the water level sensor.
	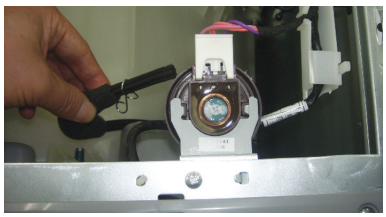	3. Disconnect the wire between the PRESSURE HOSE and the water level sensor for repair / replacement.

Part	Figure	Description
WATER LEVEL SENSOR (The Hook type)	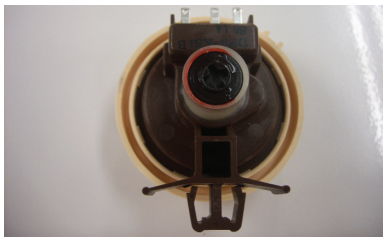	**The Hook type water level sensor**
	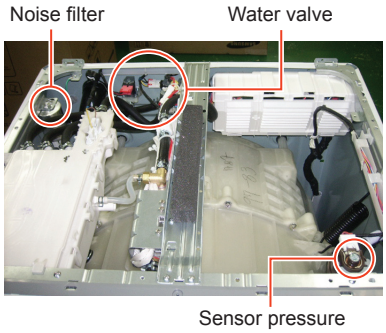	► **Disassembly** 1. Separate the Top Assy-Plate.
	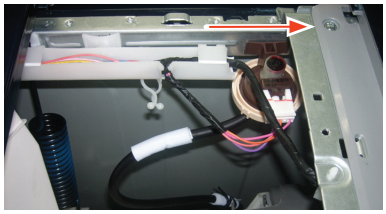	1. To remove the water lever sensor, push it slowly in the direction of the arrow shown in the figure on the left. Since this disassembly method uses the elasticity of the water level sensor hook, imposing too strong a force may damage it.
	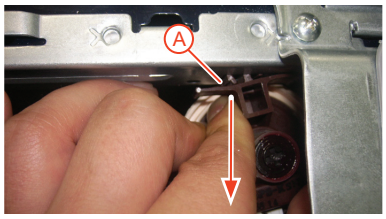	2. While a force is imposed on the water lever sensor as directed in step 1, pull the hook Ⓐ in the direction of the arrow until it is removed from the bracket spring.
	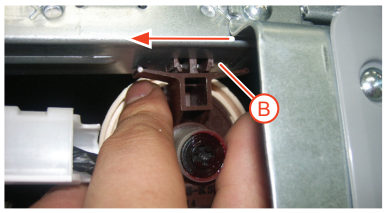	3. Impose a force slowly in the direction of the arrow designated in the figure on the left until the hook Ⓑ is removed. Then remove the water level sensor.
	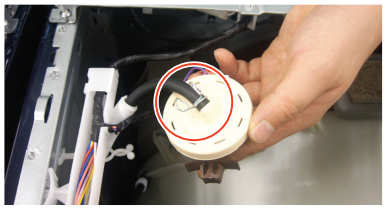	► **Assembly** 1. Connect the pressure hose to the body of the water level sensor and lock it using the clamp. When connecting the water level sensor to the set, make sure to connect it after draining water by operating the spin cycle.
	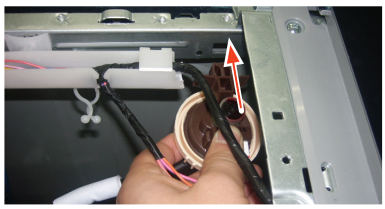	2. To fix the body of the water level sensor, insert the hook into the square hole of the bracket spring until a “click” sound is heard.

Part	Figure	Description
DOOR HINGE	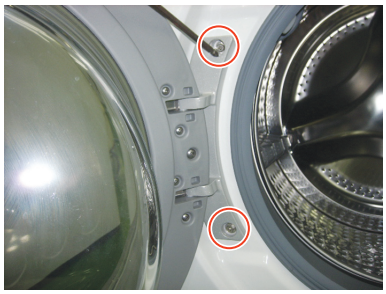	1. Remove the 2 screws holding the Door Hinge and separate the door.
	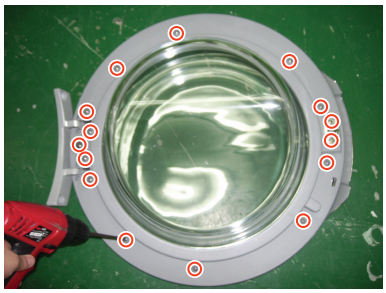	2. Remove the 15 screws holding the Holder Glass, separate the Holder Glass and replace the hinge.
DRAIN PUMP	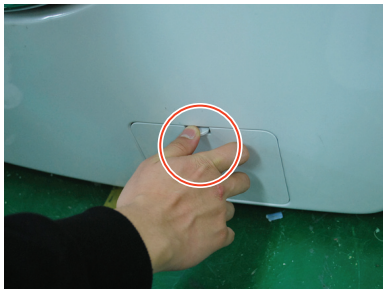	1. Insert the (-) screwdriver into the upper part of the Filter Cover and push it downwards to release the latch.
		2. Drain the remaining water through the drainage hose. Be sure to use a small bowl to collect the water collected from the drain hose.
		3. Separate the Drain Filter by turning it counterclockwise. Since the remaining water may flow out, place a bowl underneath it when separating the filter..

Part	Figure	Description
DRAIN PUMP (Continued)	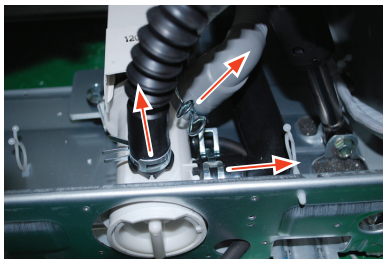	4. Drain the remaining water through the drainage hose.
	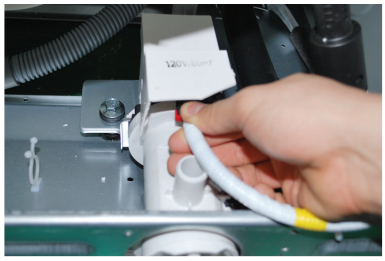	5. Disconnect the wire connector.
		6. Push it back and lift it up.
	✔ Check Points for Troubleshooting 1. Separate the Drain Filter and check if any alien substances are inside the pump (e.g. coins, buttons .., etc.) → Remove these if found. 2. Check if the wire connector for the Drain Pump ASSY has come loose. Reconnect if necessary. 3. When water leaks, check the assembly status of the Clamp Hose, and Cap Drain → Take the relevant countermeasure if necessary. Turn the filter cap counterclockwise, clean and remove any material that has collected.	

Part	Figure	Description
DOOR-LOCK S/W		1. Open the Door. Remove the Wire Diaphragm and remove it from The Front Frame. For easier disassembly, remove the spring from the lower part of the Diaphragm with a (-) screwdriver. Since the Diaphragm can be damaged when removing it, remove it slowly in one direction.
	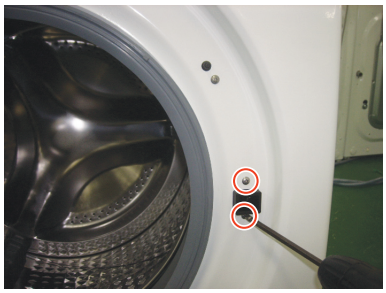	2. Remove the 2 screws.
		3. Remove the screw holding the Door-Lock S/W. Remove the Door-Lock S/W. Remove the connection wire. (Remove the connector after releasing it by pressing the latch.)

Part	Figure	Description
Heater	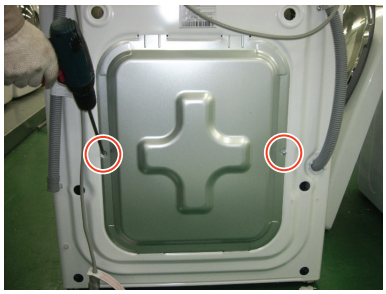	1.Seperate the Back Cover
	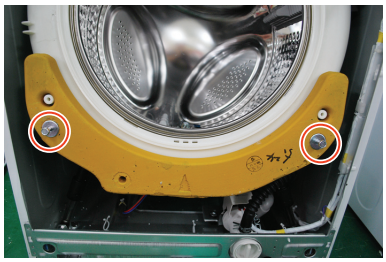	2.Seperate the 2 bolts
	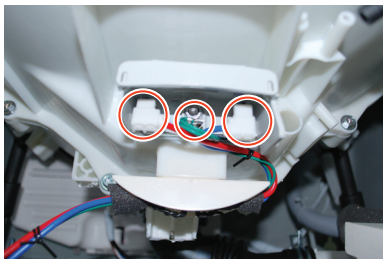	3. Seperate the Connection Housing(3). Remove the nut holding the heater and the heater.
		4. Remove the heater from the Tub. ⚠ **Caution** Make sure to insert the Heater into the correct position of the bracket inside the Tub when reassembling it. Otherwise, there is a risk of fire. 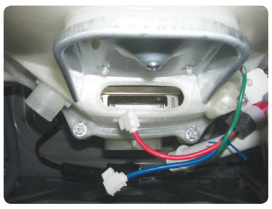 Make sure to push it inwards until the packing part comes into the Tub completely when reassembling it so that the packing part is completely stuck to the Tub. Fasten the holding nut with a force of 5Kgf/ cm2. If the nut is not fastened properly, there is a risk of water leaking.

Reassembly is in the reverse order of the removal.

4. TROUBLESHOOTING

4-1. ERROR MODES

► **This is a washer integrated error mode. For detailed information, refer to the general repair scripts.**

Error Type	For USA		Causes	Remarks
	LED	LCD		
Water Level Sensor	LE	Error! Water Level Sensor Problem	- The part of the hose where the water level sensor is located is damaged (punctured). - The hose is clogged with foreign material. - The hose is folded. - Too much lubricant has been applied to the insertion part of the air hose. - Hose engagement error (disengaged) - Part fault (Faulty internal soldering) - The water level sensor terminal is disengaged. - Main PBA fault.	
Motor Driving Error and Hall Sensor Error	3E	Error! The motor is not working properly.	- The PBA connector terminal is not connected. - The motor spin net is not engaged. - The motor's internal coil is damaged (short-circuited or cut) - The hall sensor terminal is not connected. - Foreign material (a screw) has entered the motor.	This error occurs because of restrained revolutions
	E3		- Motor overloaded due to too much laundry (Non-sensing) - The motor hall sensor terminal is not connected. - PBA fault - The motor driving error from the PBA is weak. : Unstable relay operation, etc.	This error occurs when an interference is generated due to too much laundry, etc.
	bE		- This occurs due to erroneous operating signals from the motor hall sensor. - The IPM terminal of the main PBA is not connected. - The DD motor cover is out of place. - The PCB housing terminal is not connected. - PBA fault - DD motor fault	
Water Supply Error	nF	Error! Low Water Pressure	- Foreign material is entering the water supply valve. - The water supply valve terminal is not connected. (Wire disconnected) - The warm water and rinse connectors are wrongly connected to each other. - This occurs if the PCB terminal from the drain hose to the detergent drawer is not connected. Check whether the transparent hose is folded or torn.	If this error occurs in the Wool course
			- The cold and warm water supply hoses are wrongly engaged into each other. - The temperature of the water supplied through the dry valve during a dry cycle is sensed as higher than 70 ˚C.	The water supplied for 1 minute drying the drying cycle is 0.3 ~ 0.4 L.
			- The water temperature is sensed as higher than 50 ˚C in the Wool or Lingerie courses.	
Drain Error	nd	Error! No Draining	- The pump motor impeller is damaged internally. - The wrong voltage (220 V → 110 V) is supplied to the parts. - Part fault - This occurs due to freezing in the winter season - The drain hose is clogged. (Injection error, foreign material) - Clogged with foreign material - The water pump terminal is not connected: rubber band, bills, cotton, hair pins, coins have collected inside the drain pump ASSY.	

Error Type	For USA		Causes	Remarks
	LED	LCD		
Power Error	2E	Error! High/Low Voltage Detected	- Check the consumer's power conditions. : Make sure to check the operating voltage. Connect a tester to the internal power terminals during the Boil or Dry operations and observe the washing machine's operation carefully. : Check the voltages. (An error occurs when under or over voltage is supplied.) : Check whether a plug receptacle is used. When the connecting wire is 1m, a momentary low voltage may drop up to 10 V - Main PBA fault (sometimes)	
	PF	-	- This error is not a fault but occurs during a momentary power failure : When this error code is displayed, the operation restarts from the cycle that was stopped due to the power failure. : If the washing machine is not operating and this error code is displayed, it is displayed to notify that a power failure has occurred.	
Communication Error	-	Error! Electronic Control Problem	- The signals between the sub and main PBAs are not sensed because of commuication error. - Check the connector connections between the sub and main PBAs carefully. → Check for incorrect or loose connections, etc. - Remove the sub PBA C/Panel and check for any faulty soldering.	
Switch Error (Main Relay Error)	E2	Error! A button is either stuck or is being pressed continuously.	- The Power button is pressed continually (for more than 12 seconds). - A switch is jammed or stuck due to be pressed unevenly due to deformation of the control panel or button. - This error may occur when the screws that hold the sub PBA in place are tightened too much. - A button other than the Power button is continually pressed (for more than 30 seconds). - Deformation of an internal plastic injection part - A screw for assembling the sub PBA is tightened too much.	
	Sr	Error! Power Interruption	- The main relay of the PBA is short-circuited. - The main relay terminal is connected incorrectly. (The terminal is bent and contact cannot be made.)	When the PBA motor relay does not operate

Error Type	For USA		Causes	Remarks
	LED	LCD		
Door Error	dS (Before operation)	Error! Door is open.	- A switch contact error because of a deformation of the door hook - When the door is pulled by force	When the door is not opened after the door open operation
	dL (During operation)	Error! The door was unlocked while the washer was running.	- This occurs in the Boil wash because the door is pushed due to a pressure difference from internal temperature changes	When the door is not locked after the door close operation
	LO (Unlock Fail)	Error! The door will not unlock.	- The door lock switch terminal is connected incorrectly. - The door lock switch terminal is broken. - This occurs intermittently because of an electric wire leakage - Main PCB fault	
	FL (Lock Fail)	Error! The washer door would not lock.		
Heater Error	Hr (Heater Relay)	Error! Water Temperature Control Problem	- The washing heater is short-circuited or has a wire disconnected. - The washing heater in the tub has an error. (Contact error, temperature sensor fault) - If the water level sensor operates without water because water is frozen or for any other reason and the temperature sensor engaged at the bottom to prevent overheating for the washing heater detects a temperature of 100 to 150 ˚C, the washing machine turns the input power off.	If the heater has no error, this occurs because of a PBA relay malfunction.
			- This error occurs when the red temperature sensor at the center of the dry heater operates (at a temperature higher than 145 ˚C) : Corrective action – Press the button at the center lightly. The washing machine will operate normally. Alternatively, replace the temperature sensor if the temperature sensing is unstable because of functional degradation. - This occurs when the steam function does not operate normally. - This error does not occur in existing drum products. Check whether the product is a steam model	
Water Leakage Error	LE	Error! Water Leakage Problem	- Heater engagement fault (out of place) - The air hose is out of place and water leakage occurs during the spin cycle. - The tub back at the safety bolts fixing part is broken. - Water leakage occurs at the front with foaming because of too much detergent - Water leakage occurs because the connecting hose to the detergent drawer is connected incorrectly. - The drain pump filter cover is engaged incorrectly. - Water leakage occurs at the drain hose. - The duct condensing holding screws are worn. - The nozzle-diaphragm is engaged in the opposite direction or the rubber packaging is omitted. - Water leakage occurs because the screws that hold the tub back and front in place are fastened incorrectly. - The leakage sensor is faulty.	

Error Type	For USA		Causes	Remarks
	LED	LCD		
Overflow Error	OE	Error! Water Supply Problem	- Water is supplied continually because the water level detection does not work. - Because the drain hose is clogged and there is an injection error (at a narrow section), the water level detection does not work and water is supplied continually. - Water is supplied continually because of freezing or because there is foreign material in the water supply valve. - This error may occur when the water level sensor is degraded.	This error occurs because the water level sensor terminal is out of place.
Temperature Sensor Error	tE	Error! Temperature Sensor Problem	- The washing heater in the tub has an error. (Contact error, temperature sensor fault) - The connector is connected incorrectly or is disconnected. - If the water level sensor operates without water because the water is frozen or for any other reason and the temperature sensor engaged at the bottom to prevent overheating for the washing heater detects a temperature of 100 to 150 ˚C, the washing machine turns the input power off.	Heater sensor fault : When the connector is connected incorrectly or has a wire disconnected or contact error
Unbalance Error	dc	Error! Unbalanced Load	- As laundry causes this error, check the laundry. - Find the reason for the unbalance and solve it as directed in the user manual.	
Foaming Detected	SUdS	Error! Excessive Suds	- This occurs when too much foaming is detected. It is also displayed while foaming is removed. When the removal is finished, the normal cycle proceeds. “Sud” or “SUdS” is displayed when too much foaming is detected and “End” is displayed when the removal of the foaming is finished. (This is one of the normal operations. It is an error for preventing non-sensing faults.)	
Mems PBA Error Detected	E8	-	- Error detected in the Mems PBA or data error detected. Check the wire connections. Replace if necessary. 1. Check the wire connections. 2. Replace the Mems PBA. 3. Main PBA wire connection error or PBA’s silver nano part malfunction. Replace if necessary.	

► These are common troubleshooting procedures for each drum-type washer error mode. For detailed information, refer to the general repair scripts.

Error Type	Error Mode		Causes	Corrective Actions	Description of Photo
	LED	LCD			
Water Level Sensor	LE	Error! Water Level Sensor Problem	• Water level sensor fault • Incorrect connections of the water level sensor terminal • The hose part for the water level sensor is folded. • Main PCB fault	• Check the water level sensor terminal connections and contacts. • An error occurs if an incorrect water level sensor is used. Make sure to check the material code. (Abnormal operation) • If the water level sensor is faulty, replace it. • If the error persists despite taking the action above, replace the PBA.	 Check the water level sensor frequency. - Check it after the water level sensor and the connector are connected. - Frequency: Approx. 26.4 KHz with no load
Washing Motor Error and Hall Sensor Error	3E E3 bE	Error! The motor is not working properly.	• Washing motor fault • Washing motor hall sensor fault • Incorrect connections of the washing motor/hall sensor connector • Washing motor rotor and stator fault • Main PCB fault	• Check the motor connector terminal connections and contacts. • 3E is displayed because overloading occurs due to too much laundry. • If the hall sensor terminal is faulty, replace the hall sensor. • Check whether the stator of the motor cover is damaged. • Check for coil disconnections due to foreign material. • If the PBA control circuit is faulty, replace the PBA.	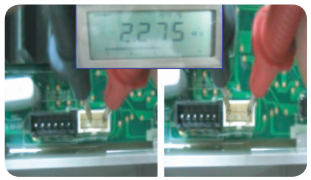 ► DD MOTOR Check the resistance on the main PCB motor. (Between pins 1 and 3, and 1 and 4 of the four (4) pins) - Resistance: Approx. 2 to 4 MΩ - Check the voltage when the power is on.
					 ► UNIVERSAL MOTOR Check the Resistance of Nos.1 and 4 of the wire pin on the side of the TACHO SENSOR. - Resistance: Approximately 40 to 45 Ω (Normal)
					 ► THREE PHASE MOTOR Measure the Resistance of Nos. 2 and 3 of the wire pin on the side of the HALL SENSOR. - The revolution of the drum needs to be reproduced. (Turn the drum by hand.) - Resistance: Approximately 3 to 12V (Voltages may differ depending on the speed of the revolutions.)

Error Type	Error Mode		Causes	Corrective Actions	Description of Photo
	LED	LCD			
Water Supply Error	nF	Error! Low Water Pressure	• Water supply value fault • Main PCB fault • Freezing in the winter season	• If the water supply valve has a wire disconnected, replace it. • Check whether the water supply valve is clogged with foreign material and whether water is supplied continually. • Check whether no water is supplied because of freezing in the winter season. • If the PBA relay operates abnormally, replace the PBA.	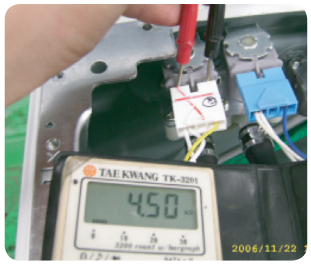 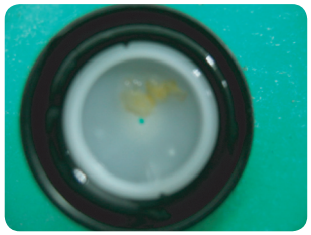 1. Check the resistance for the water supply valve. - Resistance: 4.0 to 5.0 Ω between the terminals of the water supply valve. 2. Check whether there is foreign material in the water supply valve diaphragm.
Drain Error	nd	Error! No Draining	• Drain pump fault • Freezing in the winter season • Foreign materials in the drain pump • Main PCB fault	• Check whether the revolutions of the drain pump motor are restrained by foreign material. • Check the same thing for the natural drain process. • Check the wire connectors on Main PCB and Drain Pump ASSY. The connector or wire may have poor physical connection. • If the drain pump operates abnormally intermittently when the temperature of the water in the tub is high. • If the motor revolutions are restrained due to freezing in the winter season, check the method to remove the freezing and remove as directed.	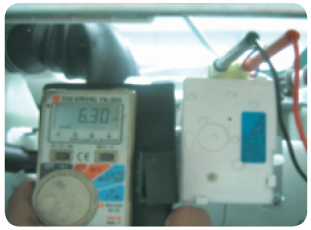 ► DRAIN MOTOR Resistance: Approximately 6.3 Ω between the Terminals for the Water Supply Valve ► DRAIN PUMP Resistance: Approximately 174 Ω between the Terminals for the Water Supply Valve

Error Type	Error Mode		Causes	Corrective Actions	Description of Photo
	LED	LCD			
Communication Error	-	Error! Electronic Control Problem	• The signals between the sub and main PBAs are not sensed. • Incorrect wire connections between the sub and main PBAs.	• Check the wire connections and terminal contacts between the sub and main PBAs. • Check for disconnected wires. • Check whether the sub PBA is short-circuited because of moisture. • If the main PBA's communication circuit is faulty, replace it.	-
Switch Error (Main Relay Error)	E2 Sr	Error! A button is either stuck or is being pressed continuously.	• The Power button is continually pressed. • A button other than the Power button is continually pressed. • Main PCB relay fault	• Check whether either the Power switch or a tact switch is continually pressed. • Check whether the service PBA holding screws are fastened too tight. If they are fastened too tight, loosen them a little. • If the main PBA switching IC on/off error has occurred, replace the main PBA. • The "E2" error occurs if the main relay connections are incorrect. Check the connections. If there is no error in the connections, replace the main PBA.	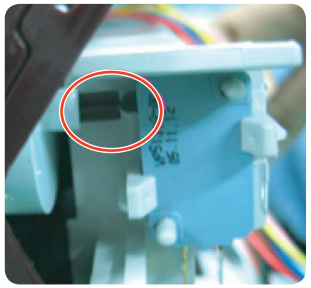 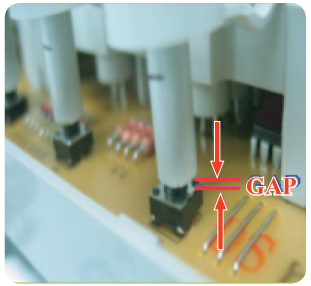 Check the contact between the control panel buttons and their corresponding tact switch. - There must be a gap between a control panel button and its corresponding micro switch. Otherwise, an error occurs after approx. 30 seconds has passed.

Error Type	Error Mode		Causes	Corrective Actions	Description of Photo
	LED	LCD			
Door Error	dS	Error! Door is open.	• Door switch fault • Drain pump fault • Dry duct fan motor fault. • Main PCB fault	• If a dS error occurs, check whether it occurs during the Boil cycle. - If it is detected that the door is open, close the door. • The 220V is directly connected to the door. Check and repair the power wire connections and insulation state. • Check the door switch. Replace if faulty. • Check the main PBA door sensing circuit. Replace if faulty.	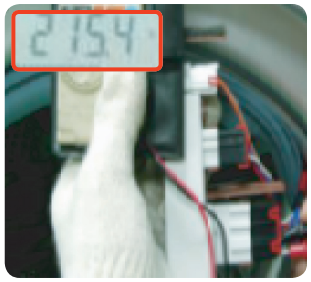 ► TYPE 1 Check the door switch voltage. Check the voltage after the power is on. (That is, check the door switch when the power button is turned on and no operating key is pressed.)
	dL	Error! The door was unlocked while the washer was running.			
	LO	Error! The door will not unlock.			 ► TYPE 2 The resistance of Nos. 3 and 5 of the DOOR LOCK SWITCH must be approximately 949 Ω.
	FL	Error! The washer door would not lock.			
Heater Error	Hr	Error! Water Temperature Control Problem	• Heater fault • A fault of the red temperature sensor at the center of the dry heater • Steam function fault • Freezing in the winter season	• Check for wires are disconnected in the washing heater. Replace if faulty. - An Hr error occurs. • If the dry heater or air refresh heater overheating sensor is faulty, replace it. - An Hr error occurs. • Check the steam heater. Replace if it is faulty. - An Hr error occurs.	-

Error Type	Error Mode		Causes	Corrective Actions	Description of Photo
	LED	LCD			
Water Leakage Error	LE	Error! Water Leakage Problem	• Check for any leakage. • Foreign material in the DV case • Fault of a hose or incorrect part engagement in the product	• Check for any leakage on the base, Hose, Valve and Tub connections and take any required action. • During natural draining, this error occurs because the drain bellows are clogged with foreign material. Remove the foreign material. • Check the drain motor operation. Replace if it does not operate normally.	 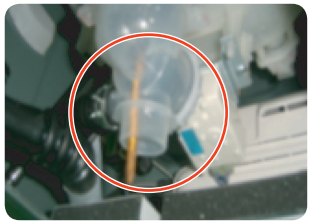 ► DRAIN PUMP TYPE (Automatic Drainage) Check whether there is any foreign material in the bellows. Check for any foreign material, such as underwear wires or coins.
					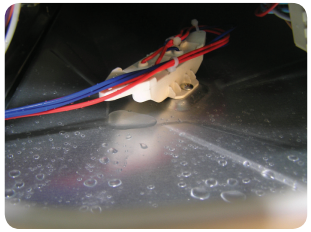 ► PUMP TYPE Check for any leakage on the base, Hose, Valve and Tub connections.
Overflow Error	OE	Error! Water Supply Problem	• Water level sensor fault • Freezing in the winter season	• If the water level sensor has a functional error, replace it. • Check the hose. This error occurs if it is torn or has a hole. • This error occurs if water is frozen in the winter season. Use hair dryer to defrost hose. Consider relocating the unit to warmer location.	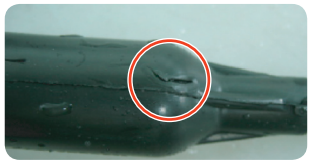 Check the hose connected to the water level sensor. Check whether the hose is folded, cut, or damaged.

Error Type	Error Mode		Causes	Corrective Actions	Description of Photo
	LED	LCD			
Temperature Sensor Error	tE	Error! Temperature Sensor Problem	• Washing temperature sensor fault • Dry temperature sensor fault • Faulty and incorrect connections of the dry condensing sensor • Main PCB fault • Freezing in the winter season	• Check the connections for the washing heater temperature sensor connector. • If the washing heater temperature sensor has a functional error, replace it. - A tE error occurs. • Check the connections for the dry heater temperature sensor connector. • If the dry heater temperature sensor has a functional error, replace it. • Check the connections for the duct condensing temperature sensor connector. • If the duct condensing temperature sensor has a functional error, replace it.	-
Unbalance Error	dc	Error! Unbalanced Load	• Motor hall sensor fault • Caused by the laundry contents	• Check the type of laundry. Check whether they may cause an unbalanced situat ion. - Educate the consumer in this case is to press pause reposition the load or remove a few items. Press start to continue and complete the wash cycle.	-

5. EXPLODED VIEWS AND PARTS LIST

[MATERIAL CODE STANDARDS]

Material codes and names and their respective naming rules are managed in accordance with the prescribed standards. Please refer to these standards when requesting a material.

1. Material Code Type

   ● : Number

   ■ : Letter (Alphabet)

Type 1	●●●●-●●●●●● ex) 0204-000418 FREON	**Enterprise-wide parts** Type 1 materials can be used for all Samsung Electronics products. (Most electrical parts belong to this type.)
Type 2	■■●●-●●●●●■ ex) DC96-01390A ASSY-CONTROL	**Division-wide parts (DC**-Washing machine)** Type 2 materials can be used for specific products. (Most instruments and tools belong to this type.)

2. Ass'y Materials

   All ass'y material codes start with DC9*.

   An ass'y material is created by combining more than two materials. If a requested material cannot be provided, you can request an ass'y material that contains that material.

5-1. MAIN

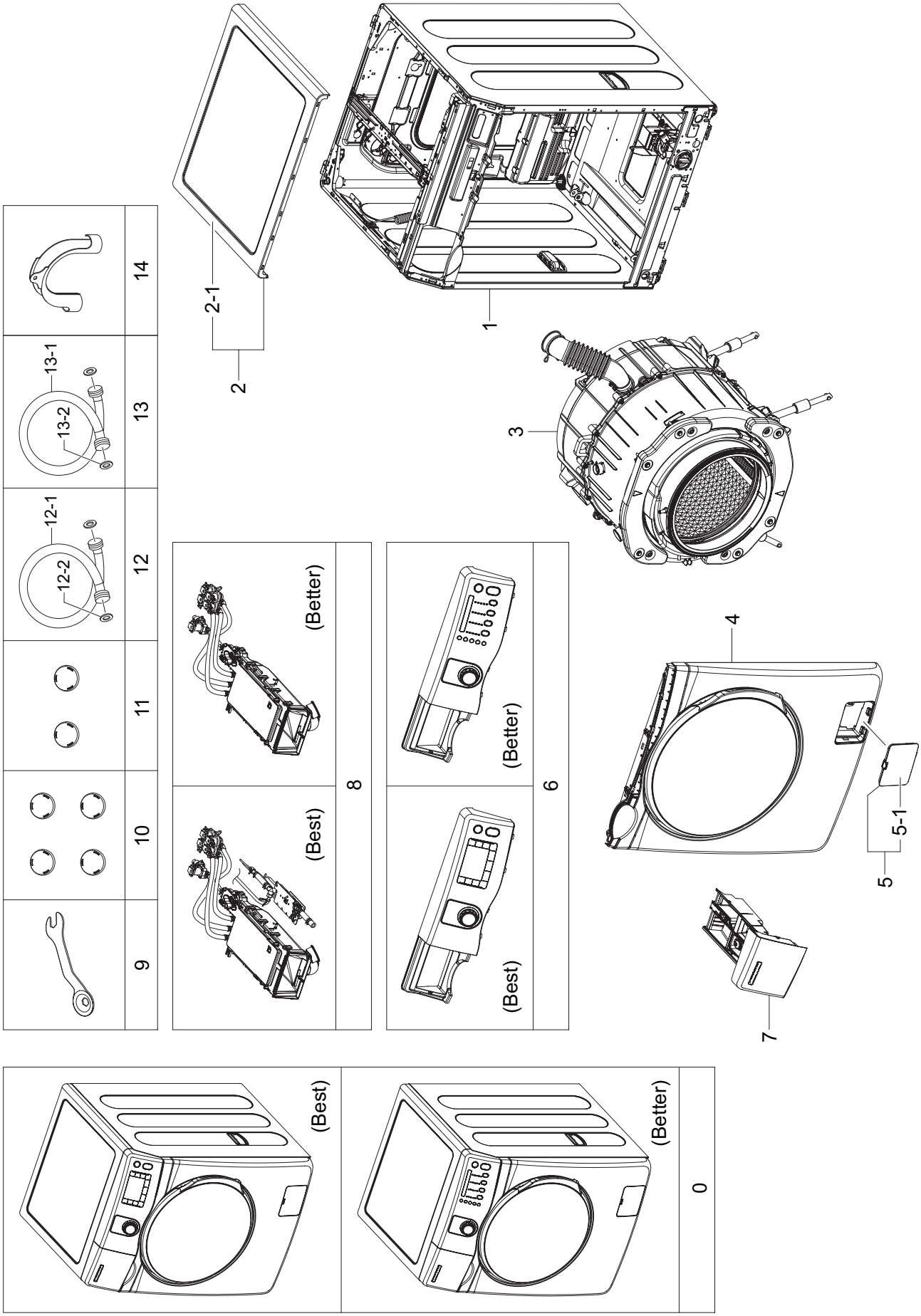
1
2
2-1
3
4
5
5-1
6
(Better)
(Best)
7
8
(Better)
(Best)
9
10
11
12
12-1
12-2
13
13-1
13-2
14
0
(Better)
(Best)

MODEL CODE: WF419AAW/XAA

Service Bom (**SA**: SERVICE AVAILABLE, **SNA**: SERVICE NOT AVAILABLE)

Drawing No.	Code No.	Description	Specification	QTY	Un	SA/SNA
0	WF419AAW/XAA	ASSY-WASHING MACHINE	SEC USA			
1		FRAME & COVER PARTS	Refer to 5.2 FRAME & COVER PARTS	1		
2	DC97-14840K	ASSY COVER TOP	ACE,WF419AAW,EGI,T0.8,684	1	PC	SA
2-1	DC63-00877A	COVER-TOP	WF448AAW/XAA,EGI,T0.8,W684,L57	1	PC	SA
3	DC90-01778A	ASSY TUB&DRUM	ACE-PJT,WF419AAW/XAA	1	PC	SNA
4		ASSY-FRAME FRONT & DOOR	Refer to 5.4 FRAME FRONT & DOOR	1		
5	DC97-15707F	ASSY COVER FILTER	FRONTIER4,WF218,ABS,WH	1	PC	SNA
5-1	DC63-00755F	COVER-FILTER	WF218ANW,ABS,-,-,-,-,-,WHT,	1	PC	SA
6	DC97-15641C	ASSY PANEL CONTROL	ACE,WF419HAW,NEAT WHI	1	PC	SNA
7	DC97-15590A	ASSY DRAWER	ACE-PJT,WF419AAW/XAA,NEAT-WH	1	PC	SA
8	DC97-15591A	ASSY HOUSING DRAWER	ACE-PJT,WF419AAW/XAA	1	PC	SNA
9	DC60-40146A	BOLT-SPANER	-,CR,-,T2.5,OD36,-,-,-,-	1	PC	SA
10	DC61-10688A	CAP-FIXER	SWF-P12,PP(TB53),-,-,-,WHT,-,	4	PC	SA
11	DC61-10688B	CAP-FIXER	SEW-HFR167AR,PP,T1.5,-,-,WHT,M	2	PC	SA
12	DC97-15691A	ASSY HOSE WATER	ACE,WF419AAW,HOT,L1240,O	1	PC	SA
12-1	DC62-00075A	HOSE-WATER(H)	-,NBR+NYLON,ID10.2,OD16.5,	1	PC	SA
12-2	DC62-40178A	SEAL-WATER	-,NR,BLK,-,-,-,ID12XOD25XT3	2	PC	SA
13	DC97-15692A	ASSY HOSE WATER	ACE,WF419AAW,COLD,L1240,	1	PC	SA
13-1	DC62-00075B	HOSE-WATER(C)	-,NBR+NYLON,ID10.2,OD16.5,	1	PC	SC
13-2	DC62-40178A	SEAL-WATER	-,NR,BLK,-,-,-,ID12XOD25XT3	2	PC	SA
14	DC62-10278A	HOSE-HANGER	PP,NTR,JS20 RESIN	1	PC	SNA

MODEL CODE: WF419AAU/XAA

Service Bom (**SA**: SERVICE AVAILABLE, **SNA**: SERVICE NOT AVAILABLE)

Drawing No.	Code No.	Description	Specification	QTY	Un	SA/SNA
0	WF419AAU/XAA	ASSY-WASHING MACHINE	SEC USA			
1		FRAME & COVER PARTS	Refer to 5.2 FRAME & COVER PARTS	1		
2	DC97-15136J	ASSY COVER TOP	ACE,WF419AAU/XAA,BLUE-STE	1	PC	SA
2-1	DC63-00926E	COVER-TOP	DV419AEU,VCM(GI),T0.8,W684,L57	1	PC	SNA
3	DC90-01778A	ASSY TUB&DRUM	ACE-PJT,WF419AAW/XAA	1	PC	SNA
4		ASSY-FRAME FRONT & DOOR	Refer to 5.4 FRAME FRONT & DOOR	1		
5	DC97-15330D	ASSY COVER FILTER	WF419AAU/XAA,ACE,BLUE-	1	PC	SA
6	DC97-15641E	ASSY PANEL CONTROL	ACE,WF419AAU/XAA,BLUE	1	PC	SNA
7	DC97-15590G	ASSY DRAWER	ACE-PJT,WF419AAU/XAA,BLUE-ST	1	PC	SA
8	DC97-15591A	ASSY HOUSING DRAWER	ACE-PJT,WF419AAW/XAA	1	PC	SNA
9	DC60-40146A	BOLT-SPANER	-,CR,-,T2.5,OD36,-,-,-,-	1	PC	SA
10	DC61-10688A	CAP-FIXER	SWF-P12,PP(TB53),-,-,-,WHT,-,	4	PC	SA
11	DC61-10688B	CAP-FIXER	SEW-HFR167AR,PP,T1.5,-,-,WHT,M	2	PC	SA
12	DC97-15691A	ASSY HOSE WATER	ACE,WF419AAW,HOT,L1240,O	1	PC	SA
12-1	DC62-00075A	HOSE-WATER(H)	-,NBR+NYLON,ID10.2,OD16.5,	1	PC	SA
12-2	DC62-40178A	SEAL-WATER	EPDM,BLK,ID12XOD25XT3	2	PC	SA
13	DC97-15692A	ASSY HOSE WATER	ACE,WF419AAW,COLD,L1240,	1	PC	SA
13-1	DC62-00075B	HOSE-WATER(C)	-,NBR+NYLON,ID10.2,OD16.5,	1	PC	SC
13-2	DC62-40178A	SEAL-WATER	EPDM,BLK,ID12XOD25XT3	2	PC	SA
14	DC62-10278A	HOSE-HANGER	PP,NTR,JS20 RESIN	1	PC	SNA

MODEL CODE: WF409SNL/XAC

Service Bom (**SA**: SERVICE AVAILABLE, **SNA**: SERVICE NOT AVAILABLE)

Drawing No.	Code No.	Description	Specification	QTY	Un	SA/SNA
0	WF409SNL/XAC	ASSY-WASHING MACHINE	CANADA			
1		FRAME & COVER PARTS	Refer to 5.2 FRAME & COVER PARTS	1		
2	DC97-14840N	ASSY COVER TOP	ACE-PJT_BETTER,WF409SNL,E	1	PC	SA
2-1	DC63-00877C	COVER-TOP	WF428AAL/XAC,EGI,T0.8,W684,L57	1	PC	SA
3	DC90-01778A	ASSY TUB&DRUM	ACE-PJT,WF419AAW/XAA	1	PC	SNA
4		ASSY-FRAME FRONT & DOOR	Refer to 5.4 FRAME FRONT & DOOR	1		
5	DC97-15707B	ASSY COVER FILTER	MACH-PJT,SEW-HFR167ARB	1	PC	SA
5-1	DC63-00755B	COVER-FILTER	SEW-HFR167ARB,ABS,-,-,-,-,-	1	PC	SA
6	DC97-15641D	ASSY PANEL CONTROL	ACE,WF409SNL,ANDRE BL	1	PC	SNA
7	DC97-15590C	ASSY DRAWER	ACE-PJT_BETTER,WF409SNL	1	PC	SA
8	DC97-15591C	ASSY HOUSING DRAWER	ACE-BETTER,WF409SNL	1	PC	SA
9	DC60-40146A	BOLT-SPANER	-,CR,-,T2.5,OD36,-,-,-,-	1	PC	SA
10	DC61-10688A	CAP-FIXER	SWF-P12,PP(TB53),-,-,-,WHT,-,	4	PC	SA
11	DC61-10688B	CAP-FIXER	SEW-HFR167AR,PP,T1.5,-,-,WHT,M	2	PC	SA
12	DC97-15691A	ASSY HOSE WATER	ACE,WF419AAW,HOT,L1240,O	1	PC	SA
12-1	DC62-00075A	HOSE-WATER(H)	-,NBR+NYLON,ID10.2,OD16.5,	1	PC	SA
12-2	DC62-40178A	SEAL-WATER	-,NR,BLK,-,-,-,ID12XOD25XT3	2	PC	SA
13	DC97-15692A	ASSY HOSE WATER	ACE,WF419AAW,COLD,L1240,	1	PC	SA
13-1	DC62-00075B	HOSE-WATER(C)	-,NBR+NYLON,ID10.2,OD16.5,	1	PC	SC
13-2	DC62-40178A	SEAL-WATER	-,NR,BLK,-,-,-,ID12XOD25XT3	2	PC	SA
14	DC62-10278A	HOSE-HANGER	PP,NTR,JS20 RESIN	1	PC	SNA

5-2. FRAME & COVER PARTS

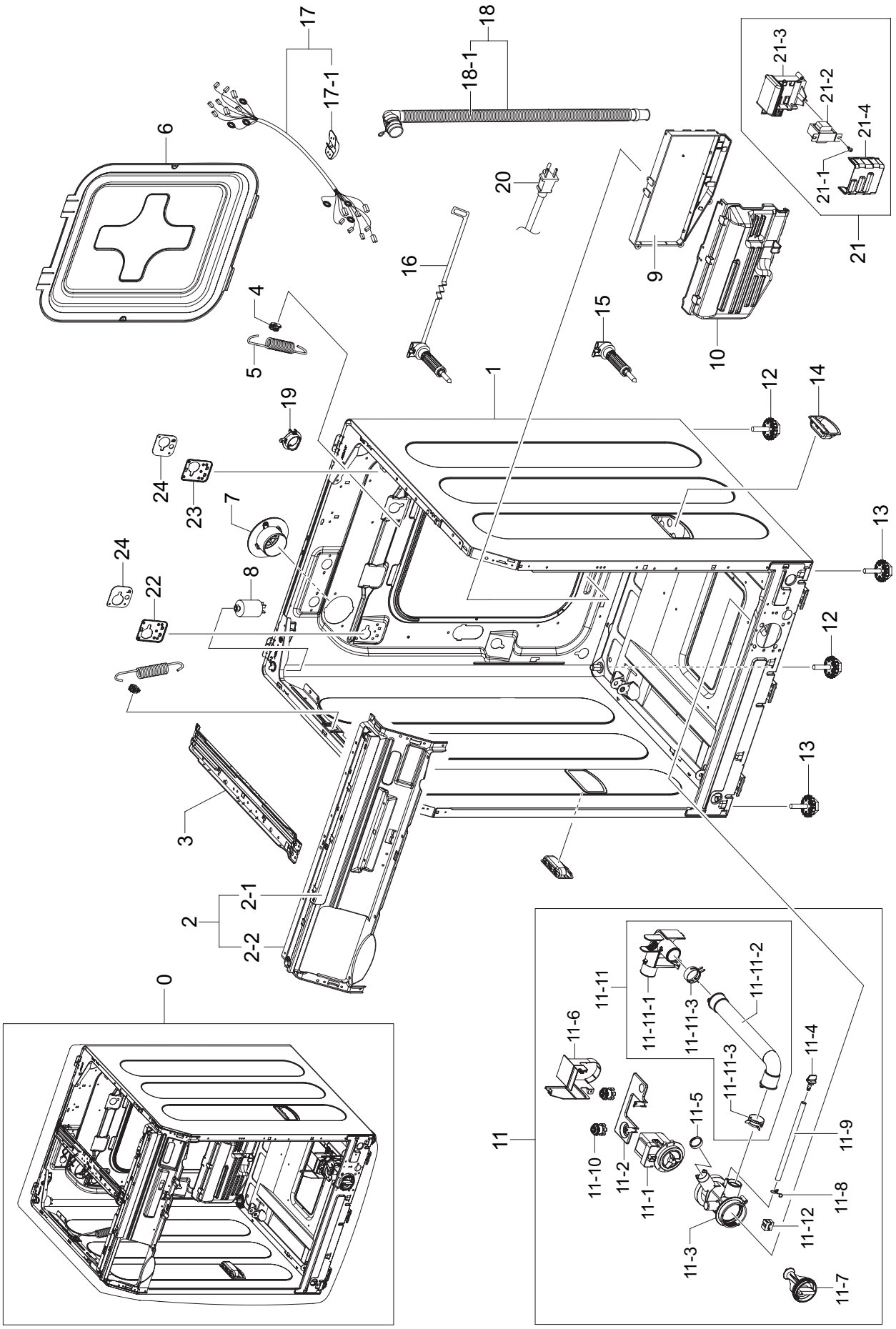

MODEL CODE: WF419AAW/XAA

Service Bom (**SA**: SERVICE AVAILABLE, **SNA**: SERVICE NOT AVAILABLE)

Drawing No.	Code No.	Description	Specification	QTY	Un	SA/SNA
0		FRAME & COVER PARTS		1		
1	DC97-15008T	ASSY FRAME	ACE,WF419AAW,PCM(GI),T1.0,-,N	1	PC	SA
2	DC97-15477A	ASSY FRAME PLATE(U)	ACE,WF419AAW/XAA,GI,	1	PC	SNA
2-1	DC61-02008A	GUIDE-PANEL	WF448AAW,PP,T2.0,-,-,-,PURPL	1	PC	SA
2-2	DC61-02298A	FRAME-PLATE(U)	WF419AAW/XAA,GI,NTR,T1.4,	1	PC	SNA
3	DC97-08632D	ASSY GUIDE WIRE	PURPLE-PJT,WF448AAG,-,-,	1	PC	SA
4	DC61-02065A	GUIDE-SPRING	WF448AAG/XXA,POM,T4,W24,L25	2	PC	SA
5	DC61-01257G	SPRING ETC-HANGER	ACE-PJT,SWP,CD4.2,ID21	2	PC	SA
6	DC63-00522A	COVER-BACK	GW-PJT,GI,T0.35,W426,L507,-,-	1	PC	SA
7	DC97-08740D	ASSY CAP O.F	WF337AAW,FRONTIER2,-,-,-,-	1	PC	SA
8	DC29-00013B	FILTER-EMI	-,-,250V,12,-,50/60Hz,CAN,-,-	1	PC	SA
9	DC92-00254A	ASSY PCB MAIN	ACE-PJT,WF419,-,120V/60Hz,	1	PC	SA
10	DC63-00749A	COVER-PCB(M)	SEW-HFR177AR,PP,-,-,-,-,-,N	1	PC	SNA
11	DC96-01700A	ASSY PUMP DRAIN	WF218ANW,-,-,120V/60Hz,-	1	PC	SNA
11-1	DC31-00054A	PUMP-DRAIN	-,120V,60Hz,40mm,80W/3600RPM	1	PC	SA
11-2	DC61-02164A	BRACKET-PUMP	WF218,GI,T1.2,-,-,-,-	1	PC	SNA
11-3	DC61-02166A	CASE-PUMP	FRONTIER-4,PP,T3.0,W58,L112,WH	1	PC	SA
11-4	DC61-10673A	CAP-DRAIN	SWF-P12,PP(TB53),-,-,-,WHT,-,	1	PC	SNA
11-5	DC62-00264A	VALVE-CHECK	FRONTIER4,EPDM,ID26/OD28.4,-	1	PC	SNA
11-6	DC63-00810A	COVER-PUMP	WF337AAW,PP(FH-44N),-,-,-,-,-	1	PC	SA
11-7	DC97-14278A	ASSY FILTER	HEBA-PJT,ASSY-FILTER,-,-	1	PC	SA
11-8	DD65-00001F	CLAMPER HOSE	SDW-H120,STEEL,-,D10.5/T1.2	1	PC	SNA
11-9	DC67-00244B	HOSE-DRAIN	VENUS,EPDM,ID6,OD11,T2.5,L250	1	PC	SA
11-10	DC99-00815A	ASSY CUSHION PUMP	MARS-PJT,WF206LNW,-,-,	2	PC	SA
11-11	DC97-12278A	ASSY GUIDE HOSE	SEW-HFR177AR,MACH-PJT,-,	1	PC	SA
11-11-1	DC61-01695A	GUIDE-HOSE PUMP	SEW-HFR177AR,PP,-,-,-,WH	1	PC	SNA
11-11-2	DC67-00246A	HOSE-DRAIN	SEW-HFR177AR,EPDM,-,-,T2.0,-,	1	PC	SNA
11-11-3	DC61-00219D	CLAMPER HOSE	SW-50A1S,SK5,-,ID33/OD35,-,	2	PC	SNA
11-12	DC63-01068A	CUSHION-PUMP	WF419,EPDM,W34,L21.5,BLK	1	PC	SNA
12	DC97-12560A	ASSY LEG	WF206LNW,MARS-PJT,-,-,-,-	2	PC	SA
13	DC97-14293A	ASSY LEG	SEW-HVR149ATA,HYBRAR-RUBBER,-,-	2	PC	SA
14	DC97-10409B	ASSY HANDLE	-,SEW-6HR124AT,-,-,-,NEAT-WH	2	PC	SA
15	DC97-07448D	ASSY FIXER TUB	FRONTIER,-,SCM435/RED,-,-	3	PC	SA
16	DC97-15007A	ASSY FIXER TUB(C)	-,WF218ANW,FIXER-CONNE	1	PC	SA
17	DC96-01288K	ASSY M. WIRE HARNESS	ACE-PJT (Best),WASH	1	PC	SA
17-1	DC61-02372A	GUIDE-WIRE	WF419AAW/XAA,ABS(V0),W39.5,L2	1	PC	SNA
18	DC97-15273A	ASSY HOSE DRAIN(I)	WF218ANB,-,-,-,-,-	1	PC	SA
18-1	DC67-00330C	HOSE-PUMP	WF218,PP,-,-,-,-,GRY,FRONTIER4	1	PC	SA

MODEL CODE: WF419AAW/XAA

Service Bom (**SA**: SERVICE AVAILABLE, **SNA**: SERVICE NOT AVAILABLE)

Drawing No.	Code No.	Description	Specification	QTY	Un	SA/SNA
19	DC61-00274A	GUIDE-HOSE	P/PV/M,PP,-,-,-,WHT,FRAME/DRA	1	PC	SA
20	DC96-00757A	ASSY POWER CORD	GW,-,UL/CSA,3/16AWG	1	PC	SA
21	DC96-01556A	ASSY TRANS REACTORV	SEW-HFR167ATS,TRANS	1	PC	SA
21-1	6002-000213	SCREW-TAPPING	TH,+,-,1,M4,L12,ZPC(WHT),S	1	PC	SA
21-2	DC26-00009F	TRANS-REACTORV	-,WINGS,-,3mH,-,6A,-,-,-,	1	PC	SNA
21-3	DC61-01920A	BRACKET-REACTOR	SEW-HFR179,PP,T2.0,W77.5	1	PC	SNA
21-4	DC63-00798A	COVER-PCB(S)	SEW-HFR167AR,PP,-,-,-,-,-,N	1	PC	SNA
22	DC61-01586B	BRACKET-FIXER(L)	WF206LNW,SGCC(GI),T1.0,	1	PC	SA
23	DC61-01587B	BRACKET-FIXER(R)	WF206LNW,SGCC(GI),T1.0,	1	PC	SA
24	DC61-01723A	BRACKET-FIXER(O/L)	WF206LNW,SGCC(GI),T2.	2	PC	SA

MODEL CODE: WF419AAU/XAA

Service Bom (**SA**: SERVICE AVAILABLE, **SNA**: SERVICE NOT AVAILABLE)

Drawing No.	Code No.	Description	Specification	QTY	Un	SA/SNA
0		FRAME & COVER PARTS		1		
1	DC97-15787A	ASSY FRAME	ACE,WF419AAU/XAA,PCM(GI),T1.0	1	PC	SA
2	DC97-15477A	ASSY FRAME PLATE(U)	ACE,WF419AAW/XAA,GI,	1	PC	SNA
2-1	DC61-02008A	GUIDE-PANEL	WF448AAW,PP,T2.0,W51.2,L638.	1	PC	SA
2-2	DC61-02298A	FRAME-PLATE(U)	WF419AAW/XAA,GI,NTR,T1.4,	1	PC	SNA
3	DC97-08632J	ASSY GUIDE WIRE	ACE_BEST,WF419AAW/XAA,T0	1	PC	SA
4	DC61-02065A	GUIDE-SPRING	WF448AAG/XXA,POM,T4,W24,L25	2	PC	SA
5	DC61-01257G	SPRING ETC-HANGER	ACE-PJT,SWP,CD4.2,ID21	2	PC	SA
6	DC63-00522A	COVER-BACK	GW-PJT,GI,T0.35,W426,L507,-,-	1	PC	SA
7	DC97-08740E	ASSY CAP O.F	ACE,WF419AAW,ID65,WHT	1	PC	SA
8	DC29-00013B	FILTER-EMI	-,-,250V,12,-,50/60Hz,CAN,-,-	1	PC	SA
9	DC92-00254A	ASSY PCB MAIN	ACE-PJT,WF419,-,120V/60Hz,	1	PC	SA
10	DC92-00279B	ASSY COVER PCB	F4MC-PJT,SEW-HFR178RTW,N	1	PC	SA
11	DC96-01700A	ASSY PUMP DRAIN	WF218ANW,-,-,120V/60Hz,-	1	PC	SNA
11-1	DC31-00054A	PUMP-DRAIN	-,120V,60Hz,40mm,80W/3600RPM	1	PC	SA
11-2	DC61-02164A	BRACKET-PUMP	WF218,GI,T1.2,-,-,-,-	1	PC	SNA
11-3	DC61-02166A	CASE-PUMP	FRONTIER-4,PP,T3.0,W58,L112,WH	1	PC	SA
11-4	DC61-10673A	CAP-DRAIN	SWF-P12,PP(TB53),-,-,-,WHT,-,	1	PC	SNA
11-5	DC62-00264A	VALVE-CHECK	FRONTIER4,EPDM,ID26/OD28.4,-	1	PC	SNA
11-6	DC63-00810A	COVER-PUMP	WF337AAW,PP(FH-44N),-,-,-,-,-	1	PC	SA
11-7	DC97-14278A	ASSY FILTER	HEBA-PJT,ASSY-FILTER,-,-	1	PC	SA
11-8	DD65-00001F	CLAMPER HOSE	SDW-H120,STEEL,-,D10.5/T1.2	1	PC	SA
11-9	DC67-00244B	HOSE-DRAIN	VENUS,EPDM,ID6,OD11,T2.5,L250	1	PC	SA
11-10	DC99-00815A	ASSY CUSHION PUMP	MARS-PJT,WF206LNW,-,-,	2	PC	SA
11-11	DC97-12278A	ASSY GUIDE HOSE	SEW-HFR177AR,MACH-PJT,-,	1	PC	SA
11-11-1	DC61-01695A	GUIDE-HOSE PUMP	SEW-HFR177AR,PP,-,-,-,WH	1	PC	SNA
11-11-2	DC67-00246A	HOSE-DRAIN	SEW-HFR177AR,EPDM,-,-,T2.0,-,	1	PC	SNA
11-11-3	DC61-00219D	CLAMPER HOSE	SW-50A1S,SK5,-,ID33/OD35,-,	2	PC	SNA
11-12	DC63-01068A	CUSHION-PUMP	WF419,EPDM,W34,L21.5,BLK	1	PC	SNA
12	DC97-12560A	ASSY LEG	WF206LNW,MARS-PJT,-,-,-,-	2	PC	SA
13	DC97-14293A	ASSY LEG	SEW-HVR149ATA,HYBRAR-RUBBER,-,-	2	PC	SA
14	DC97-10409F	ASSY HANDLE	K4-STATUS,-,HANDLE+CUSHION,-	2	PC	SA
15	DC97-07448D	ASSY FIXER TUB	FRONTIER,-,SCM435/RED,-,-	3	PC	SA
16	DC97-15007A	ASSY FIXER TUB(C)	-,WF218ANW,FIXER-CONNE	1	PC	SA
17	DC96-01288K	ASSY M. WIRE HARNESS	ACE-PJT (Best),WASH	1	PC	SA
17-1	DC61-02372A	GUIDE-WIRE	WF419AAW/XAA,ABS(V0),W39.5,L2	1	PC	SNA
18	DC97-15273A	ASSY HOSE DRAIN(I)	WF218ANB,-,-,-,-,-	1	PC	SA
18-1	DC67-00330C	HOSE-PUMP	WF218,PP,-,-,-,-,GRY,FRONTIER4	1	PC	SA

MODEL CODE: WF419AAU/XAA

Service Bom (**SA**: SERVICE AVAILABLE, **SNA**: SERVICE NOT AVAILABLE)

Drawing No.	Code No.	Description	Specification	QTY	Un	SA/SNA
19	DC61-00274A	GUIDE-HOSE	P/PV/M,PP,-,-,-,WHT,FRAME/DRA	1	PC	SA
20	DC96-00757A	ASSY POWER CORD	GW,-,UL/CSA,3/16AWG	1	PC	SA
21	DC96-01556A	ASSY TRANS REACTORV	SEW-HFR167ATS,TRANS	1	PC	SA
21-1	6002-000213	SCREW-TAPPING	TH,+,-,1,M4,L12,ZPC(WHT),S	1	PC	SA
21-2	DC26-00009F	TRANS-REACTORV	-,WINGS,-,3mH,-,6A,-,-,-,	1	PC	SNA
21-3	DC61-01920A	BRACKET-REACTOR	SEW-HFR179,PP,T2.0,W77.5	1	PC	SNA
21-4	DC63-00798A	COVER-PCB(S)	SEW-HFR167AR,PP,-,-,-,-,-,N	1	PC	SNA
22	DC61-01586B	BRACKET-FIXER(L)	WF206LNW,SGCC(GI),T1.0,	1	PC	SA
23	DC61-01587B	BRACKET-FIXER(R)	WF206LNW,SGCC(GI),T1.0,	1	PC	SA
24	DC61-01723A	BRACKET-FIXER(O/L)	WF206LNW,SGCC(GI),T2.	2	PC	SA

MODEL CODE: WF409SNL/XAC

Service Bom (**SA**: SERVICE AVAILABLE, **SNA**: SERVICE NOT AVAILABLE)

Drawing No.	Code No.	Description	Specification	QTY	Un	SA/SNA
0		FRAME & COVER PARTS		1		
1	DC97-15008W	ASSY FRAME	ACE---NORMAN (BEST),592-49509	1	PC	SNA
2	DC97-15477A	ASSY FRAME PLATE(U)	ACE,WF419AAW/XAA,GI,	1	PC	SNA
2-1	DC61-02008A	GUIDE-PANEL	WF448AAW,PP,T2.0,-,-,-,PURPL	1	PC	SA
2-2	DC61-02298A	FRAME-PLATE(U)	WF419AAW/XAA,GI,NTR,T1.4,	1	PC	SNA
3	DC97-08632H	ASSY GUIDE WIRE	NORMAN,592-495090	1	PC	SA
4	DC61-02065A	GUIDE-SPRING	WF448AAG/XXA,POM,T4,W24,L25	2	PC	SA
5	DC61-01257G	SPRING ETC-HANGER	ACE-PJT,SWP,CD4.2,ID21	2	PC	SA
6	DC63-00522A	COVER-BACK	GW-PJT,GI,T0.35,W426,L507,-,-	1	PC	SA
7	DC97-08740D	ASSY CAP O.F	WF337AAW,FRONTIER2,-,-,-,-	1	PC	SA
8	DC29-00013B	FILTER-EMI	-,-,250V,12,-,50/60Hz,CAN,-,-	1	PC	SA
9	DC92-00254C	ASSY PCB MAIN	NORMAN BEST WASHER,MAIN,12	1	PC	SA
10	DC63-00749A	COVER-PCB(M)	SEW-HFR177AR,PP,-,-,-,-,-,N	1	PC	SNA
11	DC96-01700A	ASSY PUMP DRAIN	WF218ANW,-,-,120V/60Hz,-	1	PC	SNA
11-1	DC31-00054A	PUMP-DRAIN	-,120V,60Hz,40mm,80W/3600RPM	1	PC	SA
11-2	DC61-02164A	BRACKET-PUMP	WF218,GI,T1.2,-,-,-,-	1	PC	SNA
11-3	DC61-02166A	CASE-PUMP	FRONTIER-4,PP,T3.0,W58,L112,WH	1	PC	SA
11-4	DC61-10673A	CAP-DRAIN	SWF-P12,PP(TB53),-,-,-,WHT,-,	1	PC	SNA
11-5	DC62-00264A	VALVE-CHECK	FRONTIER4,EPDM,ID26/OD28.4,-	1	PC	SNA
11-6	DC63-00810A	COVER-PUMP	WF337AAW,PP(FH-44N),-,-,-,-,-	1	PC	SA
11-7	DC97-14278A	ASSY FILTER	HEBA-PJT,ASSY-FILTER,-,-	1	PC	SA
11-8	DD65-00001F	CLAMPER HOSE	SDW-H120,STEEL,-,D10.5/T1.2	1	PC	SNA
11-9	DC67-00244B	HOSE-DRAIN	VENUS,EPDM,ID6,OD11,T2.5,L250	1	PC	SA
11-10	DC99-00815A	ASSY CUSHION PUMP	MARS-PJT,WF206LNW,-,-,	2	PC	SA
11-11	DC97-12278A	ASSY GUIDE HOSE	SEW-HFR177AR,MACH-PJT,-,	1	PC	SA
11-11-1	DC61-01695A	GUIDE-HOSE PUMP	SEW-HFR177AR,PP,-,-,-,WH	1	PC	SNA
11-11-2	DC67-00246A	HOSE-DRAIN	SEW-HFR177AR,EPDM,-,-,T2.0,-,	1	PC	SNA
11-11-3	DC61-00219D	CLAMPER HOSE	SW-50A1S,SK5,-,ID33/OD35,-,	2	PC	SNA
11-12	DC63-01068A	CUSHION-PUMP	WF419,EPDM,W34,L21.5,BLK	1	PC	SNA
12	DC97-12560A	ASSY LEG	WF206LNW,MARS-PJT,-,-,-,-	2	PC	SA
13	DC97-14293A	ASSY LEG	SEW-HVR149ATA,HYBRAR-RUBBER,-,-	2	PC	SA
14	DC97-10409D	ASSY HANDLE	-,SEW-HFR167ARB,-,-,-,ANDRE-	2	PC	SA
15	DC97-07448D	ASSY FIXER TUB	FRONTIER,-,SCM435/RED,-,-	3	PC	SA
16	DC97-15007A	ASSY FIXER TUB(C)	-,WF218ANW,FIXER-CONNE	1	PC	SA
17	DC96-01288F	ASSY M. WIRE HARNESS	ACE,WASHER/4.3 CU.	1	PC	SNA
17-1	DC61-02372A	GUIDE-WIRE	WF419AAW/XAA,ABS(V0),W39.5,L2	1	PC	SNA
18	DC97-15273A	ASSY HOSE DRAIN(I)	WF218ANB,-,-,-,-,-	1	PC	SA
18-1	DC67-00330C	HOSE-PUMP	WF218,PP,-,-,-,-,GRY,FRONTIER4	1	PC	SA

MODEL CODE: WF409SNL/XAC

Service Bom (**SA**: SERVICE AVAILABLE, **SNA**: SERVICE NOT AVAILABLE)

Drawing No.	Code No.	Description	Specification	QTY	Un	SA/SNA
19	DC61-00274A	GUIDE-HOSE	P/PV/M,PP,-,-,-,WHT,FRAME/DRA	1	PC	SA
20	DC96-00757A	ASSY POWER CORD	GW,-,UL/CSA,3/16AWG	1	PC	SA
21	DC96-01556A	ASSY TRANS REACTORV	SEW-HFR167ATS,TRANS	1	PC	SA
21-1	6002-000213	SCREW-TAPPING	TH,+,-,1,M4,L12,ZPC(WHT),S	1	PC	SA
21-2	DC26-00009F	TRANS-REACTORV	-,WINGS,-,3mH,-,6A,-,-,-,	1	PC	SNA
21-3	DC61-01920A	BRACKET-REACTOR	SEW-HFR179,PP,T2.0,W77.5	1	PC	SNA
21-4	DC63-00798A	COVER-PCB(S)	SEW-HFR167AR,PP,-,-,-,-,-,N	1	PC	SNA
22	DC61-01586B	BRACKET-FIXER(L)	WF206LNW,SGCC(GI),T1.0,	1	PC	SA
23	DC61-01587B	BRACKET-FIXER(R)	WF206LNW,SGCC(GI),T1.0,	1	PC	SA
24	DC61-01723A	BRACKET-FIXER(O/L)	WF206LNW,SGCC(GI),T2.	2	PC	SA

MEMO

5-3. ASS'Y TUB & DRUM

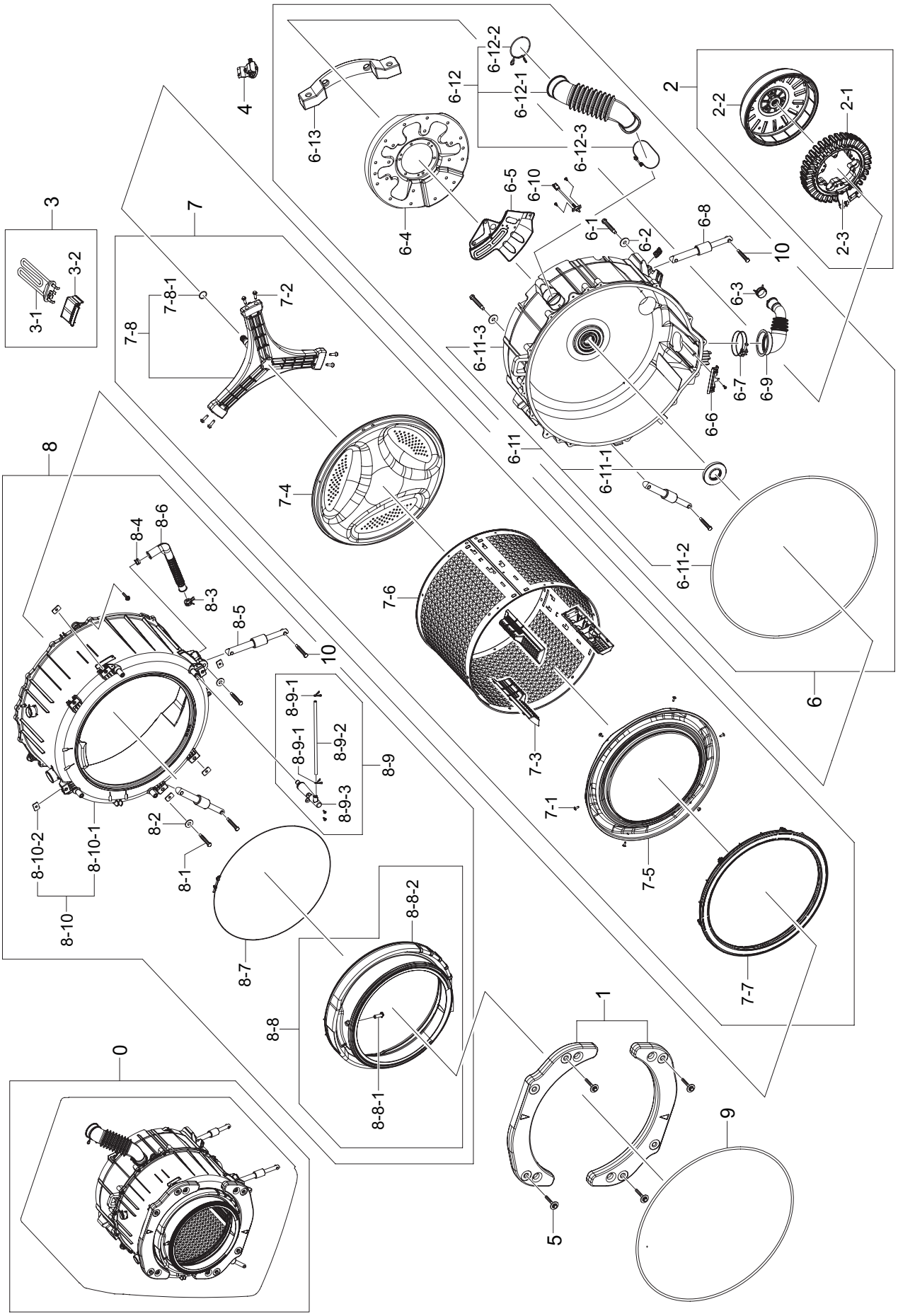

MODEL CODE: WF419AAW/XAA

Service Bom (**SA**: SERVICE AVAILABLE, **SNA**: SERVICE NOT AVAILABLE)

Drawing No.	Code No.	Description	Specification	QTY	Un	SA/SNA
0	DC90-01778A	ASSY TUB&DRUM	ACE-PJT,WF419AAW/XAA	1	PC	SNA
1	DC67-00400A	WEIGHT-BALANCER	WF419AAW/XAA,CONCRETE,T3	2	PC	SA
2	DC96-01218D	ASSY DD BLDC MOTOR	DON1500,34mm/Cu Wire/	1	PC	SA
2-1	DC31-00074C	MOTOR BLDC-ASSY STATOR	DON1500,0~1300,30	1	PC	SA
2-2	DC31-00075C	MOTOR BLDC-ASSY ROTOR	DON1500,0~1300,-,D	1	PC	SA
2-3	DC31-00076A	MOTOR BLDC-ASSY HALL SENSOR	DON1300,0~12	1	PC	SA
3	DC96-01417B	ASSY HEATER	WF337AAW,COVER+DC47-00006P,-	1	PC	SNA
3-1	DC47-00006P	HEATER	-,-,SUS 316L,900W,7.5A,120V,15.2~	1	PC	SA
3-2	DC63-00820A	COVER-HEATER	WF337AAW,ABS+PC,-,-,-,-,-,-	1	PC	SNA
4	DC96-01703B	ASSY SENSOR PRESSURE	PURPLE PJT,PURPLE P	1	PC	SA
5	DC97-02412A	ASSY BOLT	SWF-P12,MOTOR/ M8*L62,-,-,-,-	4	PC	SA
6	DC97-11520M	ASSY TUB BACK	ACE-PJT,WF419AAW/XAA,4.3cu	1	PC	SNA
6-1	DC60-40141A	BOLT-HEX	SM10C/DAMPER,HEX,M8,L66,-,ZPC2(	2	PC	SA
6-2	DC60-60044A	WASHER-PLAIN	-,ID10.5,OD30,T3,-,STS304	2	PC	SNA
6-3	DC61-00219D	CLAMPER HOSE	SW-50A1S,SK5,-,ID33/OD35,-,	1	PC	SNA
6-4	DC61-01338B	BRACKET-HOUSING BEARING	DR130,SBHG1-A,T1	1	PC	SNA
6-5	DC61-01431B	BRACKET-TUB(B)	FRONTIER,SBHG1-A,T0.35,-,	1	PC	SNA
6-6	DC61-01482A	BRACKET-HEATER	GW-PJT,STS430/304,T0.5,W9	1	PC	SNA
6-7	DC65-00014A	CLAMPER HOSE-JOINT	GW-PJT,HSWR,-,ID82,ZP	1	PC	SA
6-8	DC66-00470B	DAMPER-SHOCK	ACE,STEEL+PP+RUBBER,80N,-,-	2	PC	SA
6-9	DC67-00126A	HOSE-DRAIN	GW-PJT,EPDM,OD 68,-,T2.0,-,BL	1	PC	SA
6-10	DC90-10128H	ASSY THERMISTOR	KS-PJT,RUBBER ADD,-,-	1	PC	SA
6-11	DC97-15328G	ASSY S.TUB BACK	ACE-PJT/SVC,WF419AAW,4.3	1	PC	SA
6-11-1	DC62-00223A	SEAL-OIL	GW-PJT,EPDM,BLK,-,W77.55,L12,63	1	PC	SA
6-11-2	DC69-00804A	PACKING-TUB	GW-PJT,-,EPDM,PI8,W624,L1930	1	PC	SA
6-11-3	DC97-11526K	ASSY SEMI TUB BACK	ACE,WF419AAW,4.3cu.ft	1	PC	SNA
6-12	DC97-15589A	ASSY HOSE O.F	PRIME-PJT,WF209ANW/XAA,-,-	1	PC	SNA
6-12-1	DC67-00155A	HOSE-O.F(I)	WINGS-PJT,EPDM,-,-,T2.0,-,BL	1	PC	SA
6-12-2	DC72-00001D	BAND-RING	WINGS-PJT,HSWR,T2.4,-,-,YEL,ID	1	PC	SA
6-12-3	DC72-00055A	CLAMPER HOSE-JOINT	27INCH Washer,HSWR,-,	1	PC	SA
6-13	DC67-00140B	WEIGHT-BALANCER(R)	WF419AAW,FE,W359,L84,	1	PC	SNA
7	DC97-15478A	ASSY DRUM	ACE-PJT,WF419AAW/XAA,4.3 cu.ft	1	PC	SA
7-1	6002-001186	SCREW-TAPPING	TH,+,-,2,M5.5,L16,PASS,STS	9	PC	SA
7-2	DC60-40137A	BOLT-HEX	MARS-PJT,STS430,M8,-,P1.25,L30,	6	PC	SA
7-3	DC66-00453A	DRUM-LIFTER	ZEUS-PJT,PP(TI42),-,-,L314.2	3	PC	SA
7-4	DC66-00542A	DRUM-BACK	WF419AAW/XAA,STS430,-,OD582,T0	1	PC	SNA
7-5	DC66-00550A	DRUM-FRONT	WF419AAW/XAA,STS430,-,OD582,-	1	PC	SNA
7-6	DC66-00558A	DRUM-WRAPPER	WF419AAW/XAA,STS430,OD561.6	1	PC	SNA

MODEL CODE: WF419AAW/XAA

Service Bom (**SA**: SERVICE AVAILABLE, **SNA**: SERVICE NOT AVAILABLE)

Drawing No.	Code No.	Description	Specification	QTY	Un	SA/SNA
7-7	DC97-12135A	ASSY BALANCER	ZEUS-PJT,-,-,-,-	1	PC	SA
7-8	DC97-15491A	ASSY FLANGE SHAFT	ACE-PJT,WF419AAW/XAA,4	1	PC	SA
7-8-1	6044-001172	RING-OG	ID28,OD30.5,T2.5,BLK,NBR	1	PC	SNA
8	DC97-15640A	ASSY TUB FRONT	ACE-PJT,WF419AAW/XAA,4.3c	1	PC	SNA
8-1	DC60-40141A	BOLT-HEX	SM10C/DAMPER,HEX,M8,L66,-,ZPC2(	2	PC	SA
8-2	DC60-60044A	WASHER-PLAIN	-,ID10.5,OD30,T3,-,STS304	2	PC	SNA
8-3	DC61-00158A	CLAMPER HOSE	SW65ASP,SK5,ID23,-,T0.8/YEL	1	PC	SNA
8-4	DC61-60067C	CLAMPER HOSE	-,SK5,-,ID15.5,WHT,-	1	PC	SNA
8-5	DC66-00470A	DAMPER-SHOCK	FRONTIER II,STEEL+PP+RUBBER	2	PC	SA
8-6	DC67-00301A	HOSE-AIR PUMP	FRONTIER 2 MC,EPDM,ID19.5,	1	PC	SA
8-7	DC97-04981D	ASSY CLAMP DIAPHGRAM	WINGS-PJT,-,-,HSWR/	1	PC	SA
8-8	DC97-14932B	ASSY DIAPHRAGM	ACE,WF419AAW,4.3cu.ft	1	PC	SA
8-8-1	DC62-00240A	NOZZLE-STEAM	SEW-6HR128ATC,FRPP,NOZZLE :	1	PC	SA
8-8-2	DC64-00802C	DOOR-DIAPHRAGM	WF419,EPDM,T2.5,W415,L482	1	PC	SA
8-9	DC97-15500B	ASSY JOINT AIR	ACE,WF419AAW,4.3cu.ft,ASS	1	PC	SA
8-9-1	DC61-70029A	SPRING-CLIP	-,HSWR67,-,ID7.5,OD9.9,-,-,-	2	PC	SA
8-9-2	DC67-00089L	HOSE-WATER	SEW-HMW125ATH,TPE,ID5,OD9,T2.	1	PC	SNA
8-9-3	DC97-15501A	ASSY JOINT AIR-SEMI	FRONTER,WF338AAW,-,-	1	PC	SA
8-10	DC97-15596A	ASSY SEMI TUB FRONT	ACE,WF419AAW,-,-,-,-	1	PC	SA
8-10-1	DC61-02268A	TUB-FRONT	WF419AAW/XAA,FRPP-GF15%,ID636,	1	PC	SNA
8-10-2	DC61-00201A	BRACKET-NUT	SBHG-R,P1291,T3,-,-,-,NO-PAI	6	PC	SA
9	DC97-04973B	ASSY WIRE DIAPHRAGM	SEW-HFR167AR,-,-,STS	1	PC	SA
10	6011-001644	BOLT-HEX	M10,L40,ZPC2(YEL),SM10C,DAMPER	4	PC	SA

MODEL CODE: WF419AAU/XAA

Service Bom (**SA**: SERVICE AVAILABLE, **SNA**: SERVICE NOT AVAILABLE)

Drawing No.	Code No.	Description	Specification	QTY	Un	SA/SNA
0	DC90-01778A	ASSY TUB&DRUM	ACE-PJT,WF419AAW/XAA	1	PC	SNA
1	DC67-00400A	WEIGHT-BALANCER	WF419AAW/XAA,CONCRETE,T3	2	PC	SA
2	DC96-01218D	ASSY DD BLDC MOTOR	DON1500,34mm/Cu Wire/	1	PC	SA
2-1	DC31-00074C	MOTOR BLDC-ASSY STATOR	DON1500,0~1300,30	1	PC	SA
2-2	DC31-00075C	MOTOR BLDC-ASSY ROTOR	DON1500,0~1300,-,D	1	PC	SA
2-3	DC31-00076A	MOTOR BLDC-ASSY HALL SENSOR	DON1300,0~12	1	PC	SA
3	DC96-01417B	ASSY HEATER	WF337AAW,COVER+DC47-00006P,-	1	PC	SNA
3-1	DC47-00006Y	HEATER-WASH	GE24” WASHER,Incoloy800,900W	1	PC	SA
3-2	DC63-00820A	COVER-HEATER	WF337AAW,ABS+PC,-,-,-,-,-,-	1	PC	SNA
4	DC96-01703B	ASSY SENSOR PRESSURE	PURPLE PJT,PURPLE P	1	PC	SA
5	DC97-02412A	ASSY BOLT	SWF-P12,MOTOR/ M8*L62,-,-,-,-	4	PC	SA
6	DC97-11520M	ASSY TUB BACK	ACE-PJT,WF419AAW/XAA,4.3cu	1	PC	SNA
6-1	DC60-40141A	BOLT-HEX	SM10C/DAMPER,HEX,M8,L66,-,ZPC2(	2	PC	SA
6-2	DC60-60044A	WASHER-PLAIN	-,ID10.5,OD30,T3,-,STS304	2	PC	SNA
6-3	DC61-00219D	CLAMPER HOSE	SW-50A1S,SK5,-,ID33/OD35,-,	1	PC	SNA
6-4	DC61-01338B	BRACKET-HOUSING BEARING	DR130,SBHG1-A,T1	1	PC	SNA
6-5	DC61-01431B	BRACKET-TUB(B)	FRONTIER,SBHG1-A,T0.35,-,	1	PC	SNA
6-6	DC61-01482A	BRACKET-HEATER	GW-PJT,STS430/304,T0.5,W9	1	PC	SNA
6-7	DC65-00014A	CLAMPER HOSE-JOINT	GW-PJT,HSWR,-,ID82,ZP	1	PC	SA
6-8	DC66-00470B	DAMPER-SHOCK	ACE,STEEL+PP+RUBBER,80N,-,-	2	PC	SA
6-9	DC67-00126A	HOSE-DRAIN	GW-PJT,EPDM,OD 68,-,T2.0,-,BL	1	PC	SA
6-10	DC90-10128H	ASSY THERMISTOR	KS-PJT,RUBBER ADD,-,-	1	PC	SA
6-11	DC97-15328G	ASSY S.TUB BACK	ACE-PJT/SVC,WF419AAW,4.3	1	PC	SA
6-11-1	DC62-00223A	SEAL-OIL	GW-PJT,EPDM,BLK,-,W77.55,L12,63	1	PC	SA
6-11-2	DC69-00804A	PACKING-TUB	GW-PJT,-,EPDM,PI8,W624,L1930	1	PC	SA
6-11-3	DC97-11526K	ASSY SEMI TUB BACK	ACE,WF419AAW,4.3cu.ft	1	PC	SNA
6-12	DC97-15589A	ASSY HOSE O.F	PRIME-PJT,WF209ANW/XAA,-,-	1	PC	SNA
6-12-1	DC67-00155A	HOSE-O.F(I)	WINGS-PJT,EPDM,-,-,T2.0,-,BL	1	PC	SA
6-12-2	DC72-00001D	BAND-RING	WINGS-PJT,HSWR,T2.4,-,-,YEL,ID	1	PC	SA
6-12-3	DC72-00055A	CLAMPER HOSE-JOINT	27INCH Washer,HSWR,-,	1	PC	SA
6-13	DC67-00140B	WEIGHT-BALANCER(R)	WF419AAW,FE,W359,L84,	1	PC	SNA
7	DC97-15478A	ASSY DRUM	ACE-PJT,WF419AAW/XAA,4.3 cu.ft	1	PC	SA
7-1	6002-001186	SCREW-TAPPING	TH,+,-,2,M5.5,L16,PASS,STS	9	PC	SA
7-2	DC60-40137A	BOLT-HEX	MARS-PJT,STS430,M8,-,P1.25,L30,	6	PC	SA
7-3	DC66-00453A	DRUM-LIFTER	ZEUS-PJT,PP(TI42),-,-,L314.2	3	PC	SA
7-4	DC66-00542A	DRUM-BACK	WF419AAW/XAA,STS430,-,OD582,T0	1	PC	SNA
7-5	DC66-00550A	DRUM-FRONT	WF419AAW/XAA,STS430,-,OD582,-	1	PC	SNA
7-6	DC66-00558A	DRUM-WRAPPER	WF419AAW/XAA,STS430,OD561.6	1	PC	SNA

MODEL CODE: WF419AAU/XAA

Service Bom (**SA**: SERVICE AVAILABLE, **SNA**: SERVICE NOT AVAILABLE)

Drawing No.	Code No.	Description	Specification	QTY	Un	SA/SNA
7-7	DC97-12135A	ASSY BALANCER	ZEUS-PJT,-,-,-,-	1	PC	SA
7-8	DC97-15491A	ASSY FLANGE SHAFT	ACE-PJT,WF419AAW/XAA,4	1	PC	SA
7-8-1	6044-001172	RING-OG	ID28,OD30.5,T2.5,BLK,NBR	1	PC	SNA
8	DC97-15640A	ASSY TUB FRONT	ACE-PJT,WF419AAW/XAA,4.3c	1	PC	SNA
8-1	DC60-40141A	BOLT-HEX	SM10C/DAMPER,HEX,M8,L66,-,ZPC2(	2	PC	SA
8-2	DC60-60044A	WASHER-PLAIN	-,ID10.5,OD30,T3,-,STS304	2	PC	SNA
8-3	DC61-00158A	CLAMPER HOSE	SW65ASP,SK5,ID23,-,T0.8/YEL	1	PC	SNA
8-4	DC61-60067C	CLAMPER HOSE	-,SK5,-,ID15.5,WHT,-	1	PC	SNA
8-5	DC66-00470A	DAMPER-SHOCK	FRONTIER II,STEEL+PP+RUBBER	2	PC	SA
8-6	DC67-00421A	HOSE-AIR PUMP	ACE,EPDM,ID19.3,OD25,T2.5,	1	PC	SA
8-7	DC97-04981D	ASSY CLAMP DIAPHGRAM	WINGS-PJT,-,-,HSWR/	1	PC	SA
8-8	DC97-14932B	ASSY DIAPHRAGM	ACE,WF419AAW,4.3cu.ft	1	PC	SA
8-8-1	DC62-00240A	NOZZLE-STEAM	SEW-6HR128ATC,FRPP,NOZZLE :	1	PC	SA
8-8-2	DC64-00802C	DOOR-DIAPHRAGM	WF419,EPDM,T2.5,W415,L482	1	PC	SA
8-9	DC97-15500B	ASSY JOINT AIR	ACE,WF419AAW,4.3cu.ft,ASS	1	PC	SA
8-9-1	DC61-70029A	SPRING-CLIP	-,HSWR67,-,ID7.5,OD9.9,-,-,-	2	PC	SA
8-9-2	DC67-00089L	HOSE-WATER	SEW-HMW125ATH,TPE,ID5,OD9,T2.	1	PC	SNA
8-9-3	DC97-15501A	ASSY JOINT AIR-SEMI	FRONTER,WF338AAW,-,-	1	PC	SA
8-10	DC97-15596A	ASSY SEMI TUB FRONT	ACE,WF419AAW,-,-,-,-	1	PC	SA
8-10-1	DC61-02268A	TUB-FRONT	WF419AAW/XAA,FRPP-GF15%,ID636,	1	PC	SNA
8-10-2	DC61-00201A	BRACKET-NUT	SBHG-R,P1291,T3,-,-,-,NO-PAI	6	PC	SA
9	DC97-04973B	ASSY WIRE DIAPHRAGM	SEW-HFR167AR,-,-,STS	1	PC	SA
10	6011-001644	BOLT-HEX	M10,L40,ZPC2(YEL),SM10C,DAMPER	4	PC	SA

MODEL CODE: WF409SNL/XAC

Service Bom (**SA**: SERVICE AVAILABLE, **SNA**: SERVICE NOT AVAILABLE)

Drawing No.	Code No.	Description	Specification	QTY	Un	SA/SNA
0	DC90-01778A	ASSY TUB&DRUM	ACE-PJT,WF419AAW/XAA	1	PC	SNA
1	DC67-00400A	WEIGHT-BALANCER	WF419AAW/XAA,CONCRETE,T3	2	PC	SA
2	DC96-01218D	ASSY DD BLDC MOTOR	DON1500,34mm/Cu Wire/	1	PC	SA
2-1	DC31-00074C	MOTOR BLDC-ASSY STATOR	DON1500,0~1300,30	1	PC	SA
2-2	DC31-00075C	MOTOR BLDC-ASSY ROTOR	DON1500,0~1300,-,D	1	PC	SA
2-3	DC31-00076A	MOTOR BLDC-ASSY HALL SENSOR	DON1300,0~12	1	PC	SA
3	DC96-01417B	ASSY HEATER	WF337AAW,COVER+DC47-00006P,-	1	PC	SNA
3-1	DC47-00006P	HEATER	-,-,SUS 316L,900W,7.5A,120V,15.2~	1	PC	SA
3-2	DC63-00820A	COVER-HEATER	WF337AAW,ABS+PC,-,-,-,-,-,-	1	PC	SNA
4	DC96-01703B	ASSY SENSOR PRESSURE	PURPLE PJT,PURPLE P	1	PC	SA
5	DC97-02412A	ASSY BOLT	SWF-P12,MOTOR/ M8*L62,-,-,-,-	4	PC	SA
6	DC97-11520M	ASSY TUB BACK	ACE-PJT,WF419AAW/XAA,4.3cu	1	PC	SNA
6-1	DC60-40141A	BOLT-HEX	SM10C/DAMPER,HEX,M8,L66,-,ZPC2(	2	PC	SA
6-2	DC60-60044A	WASHER-PLAIN	-,ID10.5,OD30,T3,-,STS304	2	PC	SNA
6-3	DC61-00219D	CLAMPER HOSE	SW-50A1S,SK5,-,ID33/OD35,-,	1	PC	SNA
6-4	DC61-01338B	BRACKET-HOUSING BEARING	DR130,SBHG1-A,T1	1	PC	SNA
6-5	DC61-01431B	BRACKET-TUB(B)	FRONTIER,SBHG1-A,T0.35,-,	1	PC	SNA
6-6	DC61-01482A	BRACKET-HEATER	GW-PJT,STS430/304,T0.5,W9	1	PC	SNA
6-7	DC65-00014A	CLAMPER HOSE-JOINT	GW-PJT,HSWR,-,ID82,ZP	1	PC	SA
6-8	DC66-00470B	DAMPER-SHOCK	ACE,STEEL+PP+RUBBER,80N,-,-	2	PC	SA
6-9	DC67-00126A	HOSE-DRAIN	GW-PJT,EPDM,OD 68,-,T2.0,-,BL	1	PC	SA
6-10	DC90-10128H	ASSY THERMISTOR	KS-PJT,RUBBER ADD,-,-	1	PC	SA
6-11	DC97-15328G	ASSY S.TUB BACK	ACE-PJT/SVC,WF419AAW,4.3	1	PC	SA
6-11-1	DC62-00223A	SEAL-OIL	GW-PJT,EPDM,BLK,-,W77.55,L12,63	1	PC	SA
6-11-2	DC69-00804A	PACKING-TUB	GW-PJT,-,EPDM,PI8,W624,L1930	1	PC	SA
6-11-3	DC97-11526K	ASSY SEMI TUB BACK	ACE,WF419AAW,4.3cu.ft	1	PC	SNA
6-12	DC97-15589A	ASSY HOSE O.F	PRIME-PJT,WF209ANW/XAA,-,-	1	PC	SNA
6-12-1	DC67-00155A	HOSE-O.F(I)	WINGS-PJT,EPDM,-,-,T2.0,-,BL	1	PC	SA
6-12-2	DC72-00001D	BAND-RING	WINGS-PJT,HSWR,T2.4,-,-,YEL,ID	1	PC	SA
6-12-3	DC72-00055A	CLAMPER HOSE-JOINT	27INCH Washer,HSWR,-,	1	PC	SA
6-13	DC67-00140B	WEIGHT-BALANCER(R)	WF419AAW,FE,W359,L84,	1	PC	SNA
7	DC97-15478A	ASSY DRUM	ACE-PJT,WF419AAW/XAA,4.3 cu.ft	1	PC	SA
7-1	6002-001186	SCREW-TAPPING	TH,+,-,2,M5.5,L16,PASS,STS	9	PC	SA
7-2	DC60-40137A	BOLT-HEX	MARS-PJT,STS430,M8,-,P1.25,L30,	6	PC	SA
7-3	DC66-00453A	DRUM-LIFTER	ZEUS-PJT,PP(TI42),-,-,L314.2	3	PC	SA
7-4	DC66-00542A	DRUM-BACK	WF419AAW/XAA,STS430,-,OD582,T0	1	PC	SNA
7-5	DC66-00550A	DRUM-FRONT	WF419AAW/XAA,STS430,-,OD582,-	1	PC	SNA
7-6	DC66-00558A	DRUM-WRAPPER	WF419AAW/XAA,STS430,OD561.6	1	PC	SNA

MODEL CODE: WF409SNL/XAC

Service Bom (**SA**: SERVICE AVAILABLE, **SNA**: SERVICE NOT AVAILABLE)

Drawing No.	Code No.	Description	Specification	QTY	Un	SA/SNA
7-7	DC97-12135A	ASSY BALANCER	ZEUS-PJT,-,-,-,-	1	PC	SA
7-8	DC97-15491A	ASSY FLANGE SHAFT	ACE-PJT,WF419AAW/XAA,4	1	PC	SA
7-8-1	6044-001172	RING-OG	ID28,OD30.5,T2.5,BLK,NBR	1	PC	SNA
8	DC97-15640A	ASSY TUB FRONT	ACE-PJT,WF419AAW/XAA,4.3c	1	PC	SNA
8-1	DC60-40141A	BOLT-HEX	SM10C/DAMPER,HEX,M8,L66,-,ZPC2(	2	PC	SA
8-2	DC60-60044A	WASHER-PLAIN	-,ID10.5,OD30,T3,-,STS304	2	PC	SNA
8-3	DC61-00158A	CLAMPER HOSE	SW65ASP,SK5,ID23,-,T0.8/YEL	1	PC	SNA
8-4	DC61-60067C	CLAMPER HOSE	-,SK5,-,ID15.5,WHT,-	1	PC	SNA
8-5	DC66-00470A	DAMPER-SHOCK	FRONTIER II,STEEL+PP+RUBBER	2	PC	SA
8-6	DC67-00301A	HOSE-AIR PUMP	FRONTIER 2 MC,EPDM,ID19.5,	1	PC	SA
8-7	DC97-04981D	ASSY CLAMP DIAPHGRAM	WINGS-PJT,-,-,HSWR/	1	PC	SA
8-8	DC97-14932B	ASSY DIAPHRAGM	ACE,WF419AAW,4.3cu.ft	1	PC	SA
8-8-1	DC62-00240A	NOZZLE-STEAM	SEW-6HR128ATC,FRPP,NOZZLE :	1	PC	SA
8-8-2	DC64-00802C	DOOR-DIAPHRAGM	WF419,EPDM,T2.5,W415,L482	1	PC	SA
8-9	DC97-15500B	ASSY JOINT AIR	ACE,WF419AAW,4.3cu.ft,ASS	1	PC	SA
8-9-1	DC61-70029A	SPRING-CLIP	-,HSWR67,-,ID7.5,OD9.9,-,-,-	2	PC	SA
8-9-2	DC67-00089L	HOSE-WATER	SEW-HMW125ATH,TPE,ID5,OD9,T2.	1	PC	SNA
8-9-3	DC97-15501A	ASSY JOINT AIR-SEMI	FRONTER,WF338AAW,-,-	1	PC	SA
8-10	DC97-15596A	ASSY SEMI TUB FRONT	ACE,WF419AAW,-,-,-,-	1	PC	SA
8-10-1	DC61-02268A	TUB-FRONT	WF419AAW/XAA,FRPP-GF15%,ID636,	1	PC	SNA
8-10-2	DC61-00201A	BRACKET-NUT	SBHG-R,P1291,T3,-,-,-,NO-PAI	6	PC	SA
9	DC97-04973B	ASSY WIRE DIAPHRAGM	SEW-HFR167AR,-,-,STS	1	PC	SA
10	6011-001644	BOLT-HEX	M10,L40,ZPC2(YEL),SM10C,DAMPER	4	PC	SA

MEMO

5-4. ASS'Y FRAME FRONT & DOOR

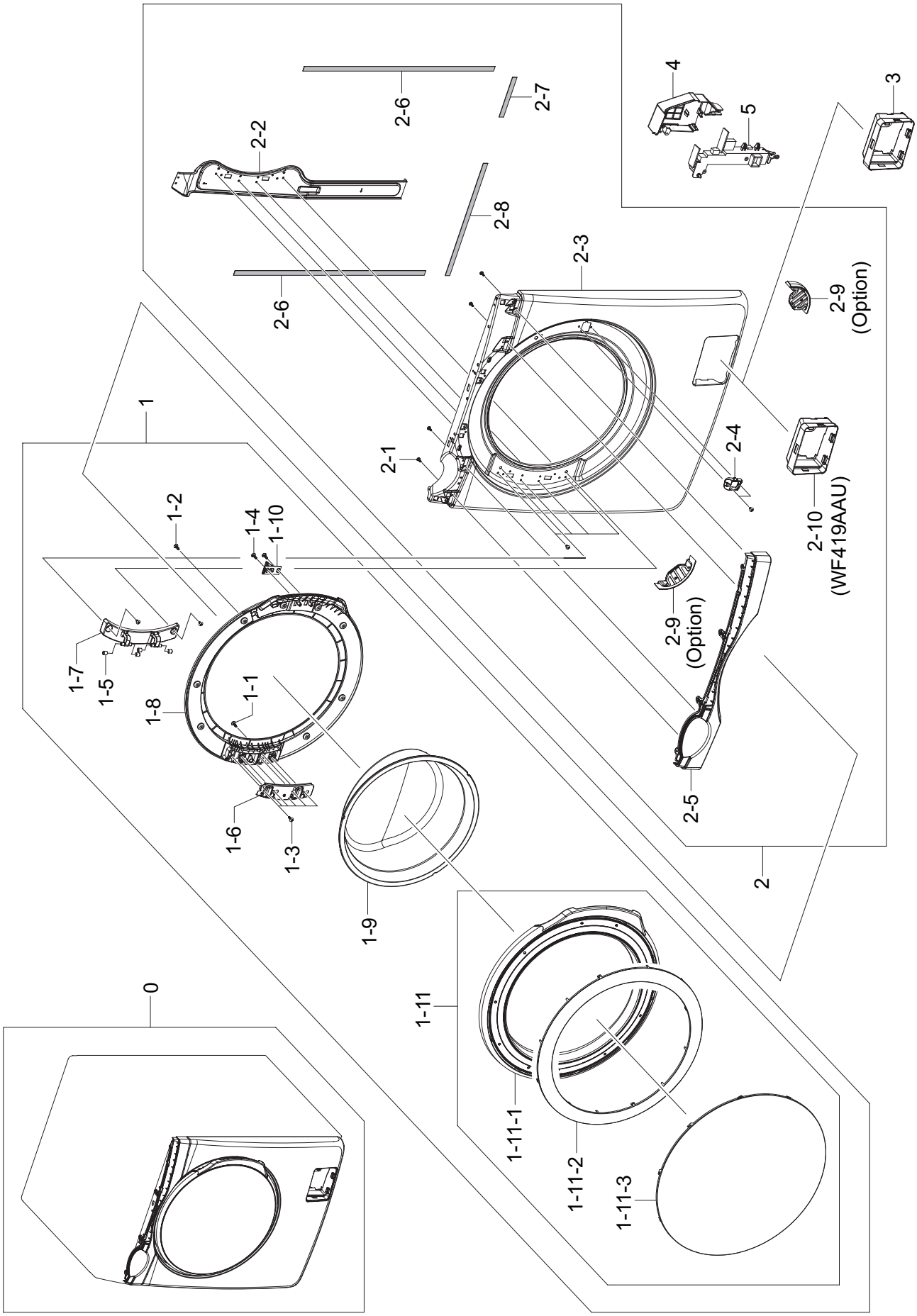

MODEL CODE: WF419AAW/XAA

Service Bom (**SA**: SERVICE AVAILABLE, **SNA**: SERVICE NOT AVAILABLE)

Drawing No.	Code No.	Description	Specification	QTY	Un	SA/SNA
0		ASSY-FRAME FRONT & DOOR		1		
1	DC97-14445B	ASSY DOOR	PURPLE,WF448AAP,-,-,OD541.7,-	1	PC	SA
1-1	6001-001668	SCREW-MACHINE	TH,+,M5,L16,PASS,STS430,FP	1	PC	SA
1-2	6002-000444	SCREW-TAPPING	TH,+,-,2S,M4,L14,PASS,STS4	15	PC	SNA
1-3	6002-001204	SCREW-TAPPING	TH,+,-,1,M4,L16,PASS,STS43	8	PC	SA
1-4	6002-001279	SCREW-TAPPING	PWH,+,-,1,M4,L12,PASS,STS3	2	PC	SA
1-5	DC61-00891A	GUIDE-HINGE	HAUZEN(DOM),POM,-,-,-,WHT,HI	4	PC	SA
1-6	DC61-01576A	SUPPORT-HINGE	FRONTIER-PJT,SBHG1-A(SGCC)	1	PC	SA
1-7	DC61-01971A	HINGE-DOOR	PURPLE-PJT,ALDC8,T3.0,W39.5,L	1	PC	SA
1-8	DC61-01972A	HOLDER-GLASS	PURPLE-PJT,PP,T2.8,W542,L56	1	PC	SA
1-9	DC64-00504A	DOOR-GLASS	TS85-PJT,SODALIME,-,-,-,-,-,N	1	PC	SC
1-10	DC66-00375A	LEVER-DOOR	10KG DRUM,ZNDC,2.5MM,-,-,-,NI	1	PC	SC
1-11	DC97-15667B	ASSY COVER DOOR	PURPLE,WF448,STS430/DOOR	1	PC	SA
1-11-1	DC63-00870A	COVER-DOOR	PURPLE-PJT,ABS(GP-35),T2.5,W5	1	PC	SA
1-11-2	DC64-01366B	DECORATION-DOOR	DV337AEW,STS430,-,-,-,-,	1	PC	SA
1-11-3	DC64-01552B	DOOR-SAFETY	ACE-PJT,PET,T2.5,-,W514,L514	1	PC	SA
2	DC97-14488H	ASSY FRAME FRONT	WF419AAW,ACE PJT,-,-,-,	1	PC	SA
2-1	6002-000239	SCREW-TAPPING	TH,+,-,2S,M4,L8,ZPC(WHT),S	14	PC	SA
2-2	DC61-01973A	BRACKET-HINGE	PURPLE-PJT,SGCC(GI),T2.0,W	1	PC	SA
2-3	DC61-02003D	FRAME-FRONT	WF419AAW/XAA,EGI,WHITE,T0.8,	1	PC	SNA
2-4	DC63-00960A	COVER-SWITCH(O)	WF218,POM,T3,-,-,-,-,NAT	1	PC	SA
2-5	DC64-01859D	DECORATION-FRONT	WF419AAW,ABS,T3.0,W70.5	1	PC	SA
2-6	DC72-00034B	SPONGE-EPDM	MAH2400,EPDM,-,T1,W15,L500,W	2	PC	SA
2-7	DC72-00034L	SPONGE-EPDM	SEW-HFR167AR,PE-FOAM,T1,W15,	1	PC	SNA
2-8	DC72-00034X	SPONGE-EPDM	WR-PA179UR,PE-FOAM,T1.0,W15,	1	PC	SNA
3	DC61-01696A	GUIDE-COVER FILTER	SEW-HFR177AR,PP,-,-,-	1	PC	SNA
4	DC63-00693A	COVER-DOOR SWITCH	FRONTIER,PP(V0),-,-,-,	1	PC	SA
5	DC64-00519B	DOOR-LOCK S/W	GW-PJT,PP-GF,-,-,-,-,BLK,1	1	PC	SA

MODEL CODE: WF419AAU/XAA

Service Bom (**SA**: SERVICE AVAILABLE, **SNA**: SERVICE NOT AVAILABLE)

Drawing No.	Code No.	Description	Specification	QTY	Un	SA/SNA
0		ASSY-FRAME FRONT & DOOR		1		
1	DC97-14445B	ASSY DOOR	PURPLE,WF448AAP,-,-,OD541.7,-	1	PC	SA
1-1	6001-001668	SCREW-MACHINE	TH,+,M5,L16,PASS,STS430,FP	1	PC	SA
1-2	6002-000444	SCREW-TAPPING	TH,+,2,M4,L14,PASS,STS430	15	PC	SNA
1-3	6002-001204	SCREW-TAPPING	TH,+,-,1,M4,L16,PASS,STS43	8	PC	SA
1-4	6002-001279	SCREW-TAPPING	PWH,+,-,1,M4,L12,PASS,STS3	2	PC	SA
1-5	DC61-00891A	GUIDE-HINGE	HAUZEN(DOM),POM,-,-,-,WHT,HI	4	PC	SA
1-6	DC61-01576A	SUPPORT-HINGE	FRONTIER-PJT,SBHG1-A(SGCC)	1	PC	SA
1-7	DC61-01971A	HINGE-DOOR	PURPLE-PJT,ALDC8,T3.0,W39.5,L	1	PC	SA
1-8	DC61-01972A	HOLDER-GLASS	PURPLE-PJT,PP,T2.8,W542,L56	1	PC	SA
1-9	DC64-00504A	DOOR-GLASS	TS85-PJT,SODALIME,-,-,-,-,-,N	1	PC	SC
1-10	DC66-00375A	LEVER-DOOR	10KG DRUM,ZNDC,2.5MM,-,-,-,NI	1	PC	SC
1-11	DC97-15667B	ASSY COVER DOOR	PURPLE,WF448,STS430/DOOR	1	PC	SA
1-11-1	DC63-00870A	COVER-DOOR	PURPLE-PJT,ABS(GP-35),T2.5,W5	1	PC	SA
1-11-2	DC64-01366B	DECORATION-DOOR	DV337AEW,STS430,-,-,-,-,	1	PC	SA
1-11-3	DC64-01552B	DOOR-SAFETY	ACE-PJT,PET,T2.5,-,W514,L514	1	PC	SA
2	DC97-15802A	ASSY FRAME FRONT	ACE Pjt,WF419AAU,BLUE	1	PC	SA
2-1	6002-000239	SCREW-TAPPING	TH,+,-,2S,M4,L8,ZPC(WHT),S	14	PC	SA
2-2	DC61-01973A	BRACKET-HINGE	PURPLE-PJT,SGCC(GI),T2.0,W	1	PC	SA
2-3	DC61-02480A	FRAME-FRONT	WF419AAU/XAA,VCM(GI),G31208,	1	PC	SNA
2-4	DC63-00960A	COVER-SWITCH(O)	WF218,POM,T3,-,-,-,-,NAT	1	PC	SA
2-5	DC64-01859D	DECORATION-FRONT	WF419AAW,ABS,T3.0,W70.5	1	PC	SA
2-9	DC63-00959A	COVER-FRONT	WF448AAP,PP,-,W8.5,L25.5,-,-	2	PC	SA
2-10	DC61-02483A	GUIDE-COVER FILTER	WF419AAU/XAA,PP(FC230	1	PC	SA
4	DC63-00693A	COVER-DOOR SWITCH	FRONTIER,PP(V0),-,-,-,	1	PC	SA
5	DC64-00519B	DOOR-LOCK S/W	GW-PJT,PP-GF,-,-,-,-,BLK,1	1	PC	SA

MODEL CODE: WF409SNL/XAC

Service Bom (**SA**: SERVICE AVAILABLE, **SNA**: SERVICE NOT AVAILABLE)

Drawing No.	Code No.	Description	Specification	QTY	Un	SA/SNA
0		ASSY-FRAME FRONT & DOOR		1		
1	DC97-14445F	ASSY DOOR	NORNAM,592-495090,OD541.7,DECO	1	PC	SA
1-1	6001-001668	SCREW-MACHINE	TH,+,M5,L16,PASS,STS430,FP	1	PC	SA
1-2	6002-000444	SCREW-TAPPING	TH,+,-,2S,M4,L14,PASS,STS4	15	PC	SNA
1-3	6002-001204	SCREW-TAPPING	TH,+,-,1,M4,L16,PASS,STS43	8	PC	SA
1-4	6002-001279	SCREW-TAPPING	PWH,+,-,1,M4,L12,PASS,STS3	2	PC	SA
1-5	DC61-00891A	GUIDE-HINGE	HAUZEN(DOM),POM,-,-,-,WHT,HI	4	PC	SA
1-6	DC61-01576A	SUPPORT-HINGE	FRONTIER-PJT,SBHG1-A(SGCC)	1	PC	SA
1-7	DC61-01971A	HINGE-DOOR	PURPLE-PJT,ALDC8,T3.0,W39.5,L	1	PC	SA
1-8	DC61-01972A	HOLDER-GLASS	PURPLE-PJT,PP,T2.8,W542,L56	1	PC	SA
1-9	DC64-00504A	DOOR-GLASS	TS85-PJT,SODALIME,-,-,-,-,-,N	1	PC	SC
1-10	DC66-00375A	LEVER-DOOR	10KG DRUM,ZNDC,2.5MM,-,-,-,NI	1	PC	SC
1-11	DC97-15667E	ASSY COVER DOOR	ACE,WF419,DECORATION-DOO	1	PC	SA
1-11-1	DC63-00870A	COVER-DOOR	PURPLE-PJT,ABS(GP-35),T2.5,W5	1	PC	SA
1-11-2	DC64-01366G	DECORATION-DOOR	592-895090,EGI,T0.5,IMPE	1	PC	SNA
1-11-3	DC64-01552B	DOOR-SAFETY	ACE-PJT,PET,T2.5,-,W514,L514	1	PC	SA
2	DC97-14488K	ASSY FRAME FRONT	ACE-PJT_BETTER,WF409SNL	1	PC	SA
2-1	6002-000239	SCREW-TAPPING	TH,+,-,2S,M4,L8,ZPC(WHT),S	14	PC	SA
2-2	DC61-01973A	BRACKET-HINGE	PURPLE-PJT,SGCC(GI),T2.0,W	1	PC	SA
2-3	DC61-02003F	FRAME-FRONT	WF409SNL,EGI,ONYX BLUE,T0.8,	1	PC	SNA
2-4	DC63-00960A	COVER-SWITCH(O)	WF218,POM,T3,-,-,-,-,NAT	1	PC	SA
2-5	DC64-01859E	DECORATION-FRONT	WF409SNL,PC-ABS,T2.5,W7	1	PC	SA
2-6	DC72-00034B	SPONGE-EPDM	MAH2400,EPDM,-,T1,W15,L500,W	2	PC	SA
2-7	DC72-00034L	SPONGE-EPDM	SEW-HFR167AR,PE-FOAM,T1,W15,	1	PC	SNA
2-8	DC72-00034X	SPONGE-EPDM	WR-PA179UR,PE-FOAM,T1.0,W15,	1	PC	SNA
3	DC61-01696A	GUIDE-COVER FILTER	SEW-HFR177AR,PP,-,-,-	1	PC	SNA
4	DC63-00693A	COVER-DOOR SWITCH	FRONTIER,PP(V0),-,-,-,	1	PC	SA
5	DC64-00519B	DOOR-LOCK S/W	GW-PJT,PP-GF,-,-,-,-,BLK,1	1	PC	SA

5-5. ASS'Y PANEL CONTROL (BEST: WF419***)

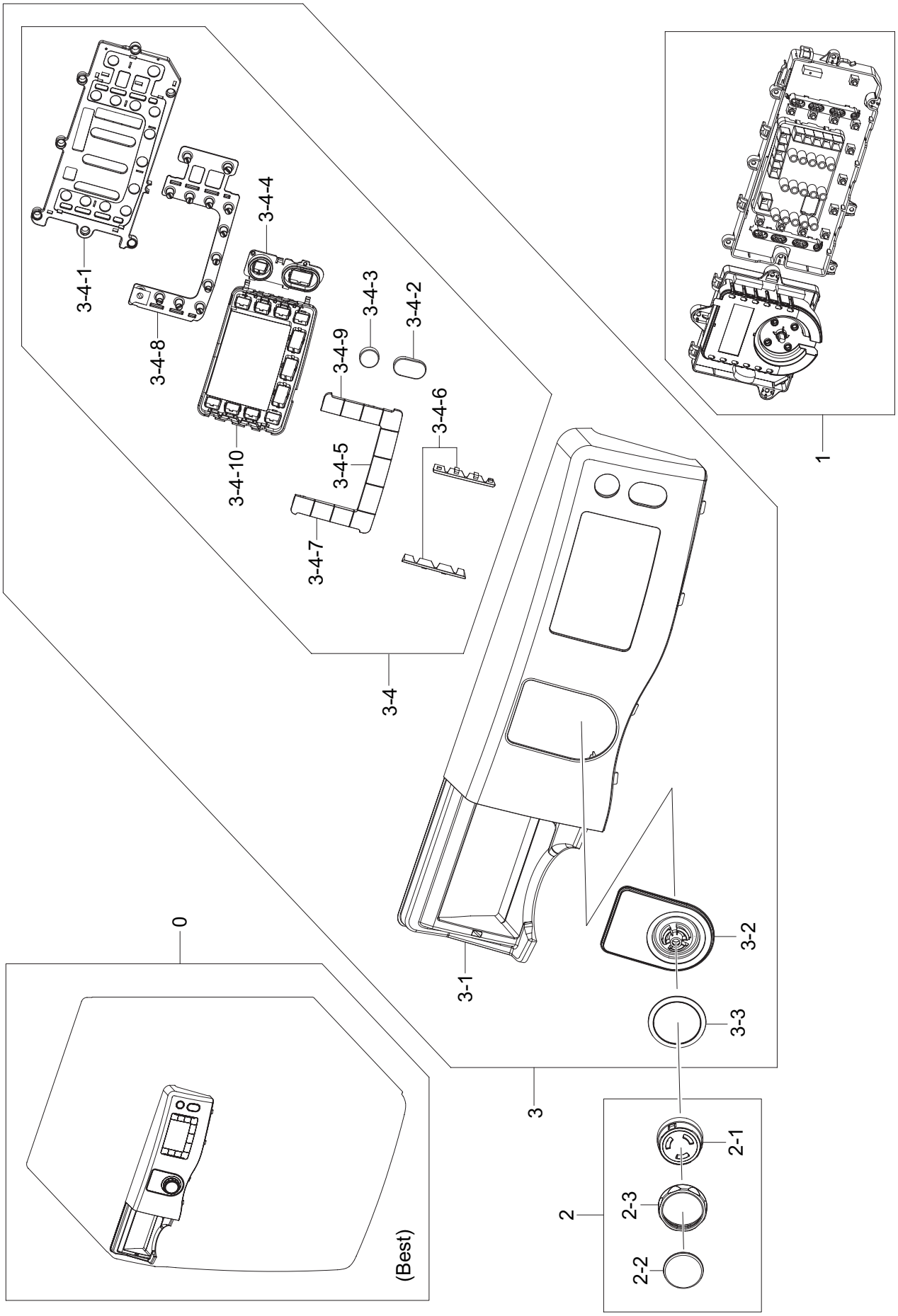

MODEL CODE: WF419AAW/XAA

Service Bom (**SA**: SERVICE AVAILABLE, **SNA**: SERVICE NOT AVAILABLE)

Drawing No.	Code No.	Description	Specification	QTY	Un	SA/SNA
0	DC97-15641C	ASSY PANEL CONTROL	ACE,WF419HAW,NEAT WHI	1	PC	SNA
1	DC92-00255A	ASSY PCB SUB	ACE-PJT,WF419,-,120V/60Hz,-	1	PC	SA
2	DC97-14447B	ASSY KNOB ENCODER	SEW-HVR147ATR,VENUS,-,	1	PC	SA
2-1	DC64-01642A	KNOB-ENCODER	SEW-HVR149AD,ABS,T2.0,-,-,N	1	PC	SNA
2-2	DC64-01643A	DECORATION-ENCODER(I)	SEW-HVR149AD,ABS,T	1	PC	SNA
2-3	DC64-01813A	DECORATION-ENCODER	SEW-HMR147ATR,ABS,-,-	1	PC	SNA
3	DC97-15593A	ASSY S.PANEL CONTROL	ACE,WF419AAW,-,WHIT	1	PC	SA
3-1	DC64-01838A	PANEL-CONTROL	WF419AAW/XAA,ABS,T3.0,W151	1	PC	SNA
3-2	DC64-01871A	WINDOW-ENCODER	WF419AAW/XAA,ACRYL(PMMA),	1	PC	SNA
3-3	DC64-01873A	DECORATION-ENCODER	WF419AAW/XAA,ABS,T2.8	1	PC	SNA
3-4	DC97-15595A	ASSY BUTTON	ACE,WF419AAW,BLACK/ENG	1	PC	SA
3-4-1	DC63-00999A	COVER-BUTTON	WF419AAW/XAA,ABS,ACE-PJT	1	PC	SNA
3-4-2	DC64-01844A	BUTTON-PUSH(S)	WF419AAW/XAA,ABS,-,Anti-F	1	PC	SNA
3-4-3	DC64-01845A	BUTTON-PUSH(P)	WF419AAW/XAA,ABS,-,-,WHT,	1	PC	SA
3-4-4	DC64-01850A	DECORATION-BUTTON(P)	WF419AAW/XAA,ABS,T2	1	PC	SNA
3-4-5	DC64-01882C	BUTTON-PUSH(F)	WF419,ABS,BLACK_EN,ACE-BE	1	PC	SNA
3-4-6	DC64-01884A	DECORATION-LED	WF419AAW/XAA,PC-ABS,T2.0,	1	PC	SNA
3-4-7	DC64-01885C	BUTTON-PUSH(O)	WF419,ABS,BLACK_EN,LEFT_A	1	PC	SNA
3-4-8	DC64-01886A	BUTTON-RUBBER	WF419AAW/XAA,SILICON,BLK,A	1	PC	SA
3-4-9	DC64-01890C	BUTTON-PUSH(O)	WF419,ABS,BLACK_EN,RIGHT_	1	PC	SNA
3-4-10	DC64-01883F	WINDOW-PANEL	WF419,ABS,T2.0,NTR,ACE_BEST	1	PC	SNA

MODEL CODE: WF419AAU/XAA

Service Bom (**SA**: SERVICE AVAILABLE, **SNA**: SERVICE NOT AVAILABLE)

Drawing No.	Code No.	Description	Specification	QTY	Un	SA/SNA
0	DC97-15641E	ASSY PANEL CONTROL	ACE,WF419AAU/XAA,BLUE	1	PC	SNA
1	DC92-00255A	ASSY PCB SUB	ACE-PJT,WF419,-,120V/60Hz,-	1	PC	SA
2	DC97-14447A	ASSY KNOB ENCODER	WF438AAW,-,-,-,-	1	PC	SA
2-1	DC64-01642A	KNOB-ENCODER	SEW-HVR149AD,ABS,T2.0,-,-,N	1	PC	SNA
2-2	DC64-01643A	DECORATION-ENCODER(I)	SEW-HVR149AD,ABS,T	1	PC	SNA
2-3	DC64-01644A	DECORATION-ENCODER	SEW-HVR149AD,AL,T3.5,	1	PC	SNA
3	DC97-15593D	ASSY S.PANEL CONTROL	ACE,WF419AAU/XAA,BL	1	PC	SA
3-1	DC64-01838C	PANEL-CONTROL	WF419AAU,ABS,T3.0,W132.5,L	1	PC	SNA
3-2	DC64-01871A	WINDOW-ENCODER	WF419AAW/XAA,ACRYL(PMMA),	1	PC	SNA
3-3	DC64-01873A	DECORATION-ENCODER	WF419AAW/XAA,ABS,T2.8	1	PC	SNA
3-4	DC97-15595D	ASSY BUTTON	ACE,WF419AAU/XAA,BLUE-STEEL,	1	PC	SA
3-4-1	DC63-00999A	COVER-BUTTON	WF419AAW/XAA,ABS,ACE-PJT	1	PC	SNA
3-4-2	DC64-01844D	BUTTON-PUSH(S)	DV419AEU,ABS,BLUE-STEEL,A	1	PC	SNA
3-4-3	DC64-01845D	BUTTON-PUSH(P)	DV419AEU,ABS,BLUE-STEEL,A	1	PC	SA
3-4-4	DC64-01850A	DECORATION-BUTTON(P)	WF419AAW/XAA,ABS,T2	1	PC	SNA
3-4-5	DC64-01882C	BUTTON-PUSH(F)	WF419,ABS,BLACK_EN,ACE-BE	1	PC	SNA
3-4-6	DC64-01884A	DECORATION-LED	WF419AAW/XAA,PC-ABS,T2.0,	1	PC	SNA
3-4-7	DC64-01885C	BUTTON-PUSH(O)	WF419,ABS,BLACK_EN,LEFT_A	1	PC	SNA
3-4-8	DC64-01886A	BUTTON-RUBBER	WF419AAW/XAA,SILICON,BLK,A	1	PC	SA
3-4-9	DC64-01890C	BUTTON-PUSH(O)	WF419,ABS,BLACK_EN,RIGHT_	1	PC	SNA
3-4-10	DC64-01883F	WINDOW-PANEL	WF419,ABS,T2.0,NTR,ACE_BEST	1	PC	SNA

MEMO

5-6. ASS'Y PANEL CONTROL (BETTER: WF409***)

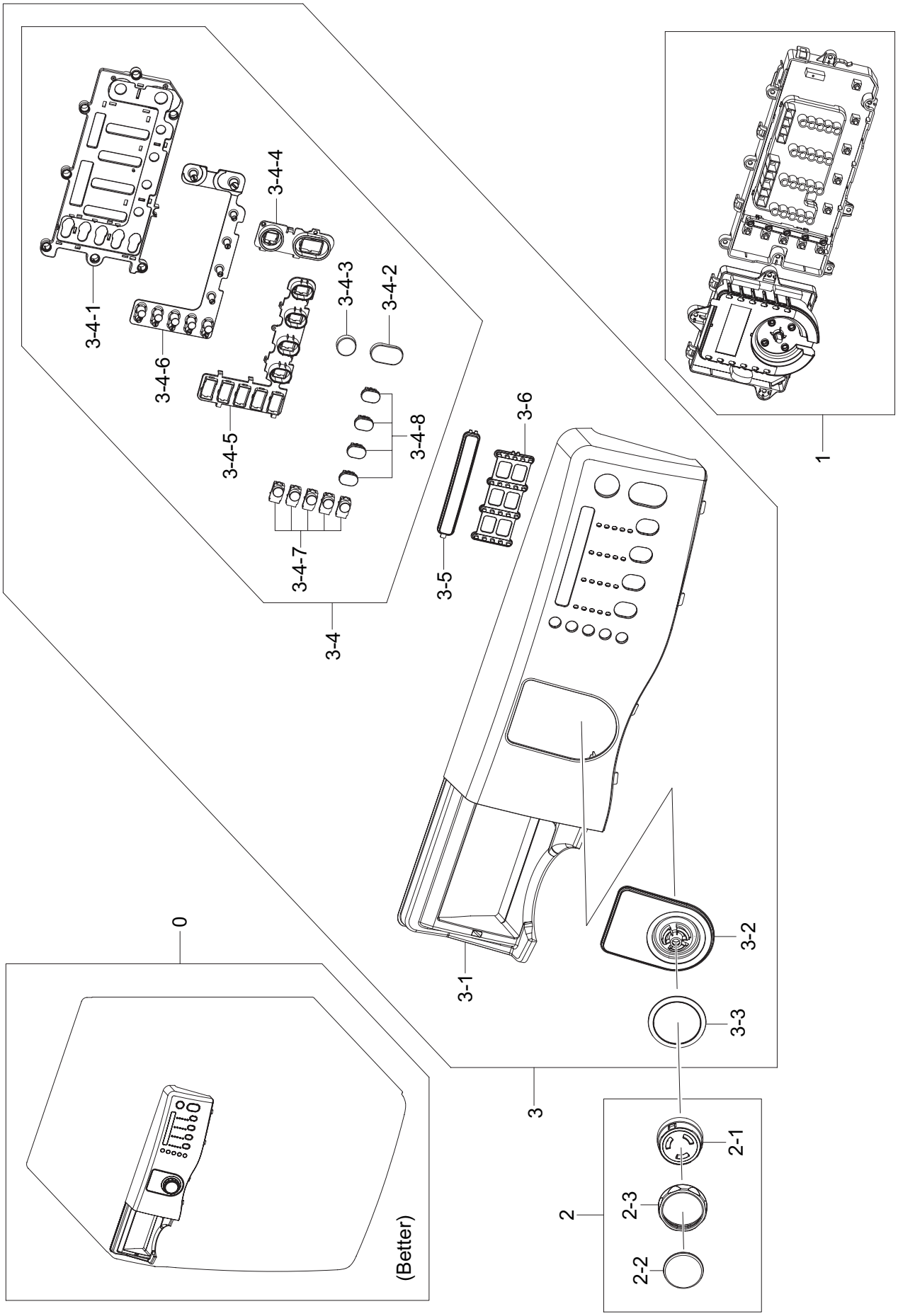

MODEL CODE: WF409SNL/XAC

Service Bom (**SA**: SERVICE AVAILABLE, **SNA**: SERVICE NOT AVAILABLE)

Drawing No.	Code No.	Description	Specification	QTY	Un	SA/SNA
0	DC97-15641D	ASSY PANEL CONTROL	ACE,WF409SNL,ANDRE BL	1	PC	SNA
1	DC92-00256A	ASSY PCB SUB	ACE-PJT,WF409,-,120V/60Hz,-	1	PC	SA
2	DC97-14447A	ASSY KNOB ENCODER	WF438AAW,-,-,-,-	1	PC	SA
2-1	DC64-01642A	KNOB-ENCODER	SEW-HVR149AD,ABS,T2.0,-,-,N	1	PC	SNA
2-2	DC64-01643A	DECORATION-ENCODER(I)	SEW-HVR149AD,ABS,T	1	PC	SNA
2-3	DC64-01644A	DECORATION-ENCODER	SEW-HVR149AD,AL,T3.5,	1	PC	SNA
3	DC97-15668A	ASSY S.PANEL CONTROL	ACE,WF409SNL	1	PC	SNA
3-1	DC64-01985A	PANEL-CONTROL	WF409SNL,ABS,T3.0,W131.6,L	1	PC	SNA
3-2	DC64-01871A	WINDOW-ENCODER	WF419AAW/XAA,ACRYL(PMMA),	1	PC	SNA
3-3	DC64-01873A	DECORATION-ENCODER	WF419AAW/XAA,ABS,T2.8	1	PC	SNA
3-4	DC97-15666A	ASSY BUTTON	ACE,WF409SNL	1	PC	SA
3-4-1	DC63-01063A	COVER-BUTTON	WF409SNL,HIPS,BLK,ACE-PJT	1	PC	SNA
3-4-2	DC64-01844C	BUTTON-PUSH(S)	WF409SNL,ABS,ONYX BLUE,AC	1	PC	SNA
3-4-3	DC64-01845C	BUTTON-PUSH(P)	WF409SNL,ABS,ONYX BLUE,AC	1	PC	SA
3-4-4	DC64-01850A	DECORATION-BUTTON(P)	WF419AAW/XAA,ABS,T2	1	PC	SNA
3-4-5	DC64-01974A	DECORATION-BUTTON(F)	WF409SNL,ABS,T2.0,W	1	PC	SNA
3-4-6	DC64-01975A	BUTTON-RUBBER	WF409SNL,SILICON,NTR,ACE-P	1	PC	SNA
3-4-7	DC64-01982A	BUTTON-PUSH(O)	WF409SNL,ABS,TRANSPARENT,	1	PC	SNA
3-4-8	DC64-01981A	BUTTON-PUSH(F)	WF409SNL,ABS,ONYX BLUE,AC	1	PC	SNA
3-5	DC64-01979A	WINDOW-PANEL	WF409SNL,ABS,T1.0,W20.1,L13	1	PC	SNA
3-6	DC64-01980A	DECORATION-LED	WF409SNL,PC-ABS,T1.2,W118	1	PC	SNA

5-7. ASS'Y DRAWER

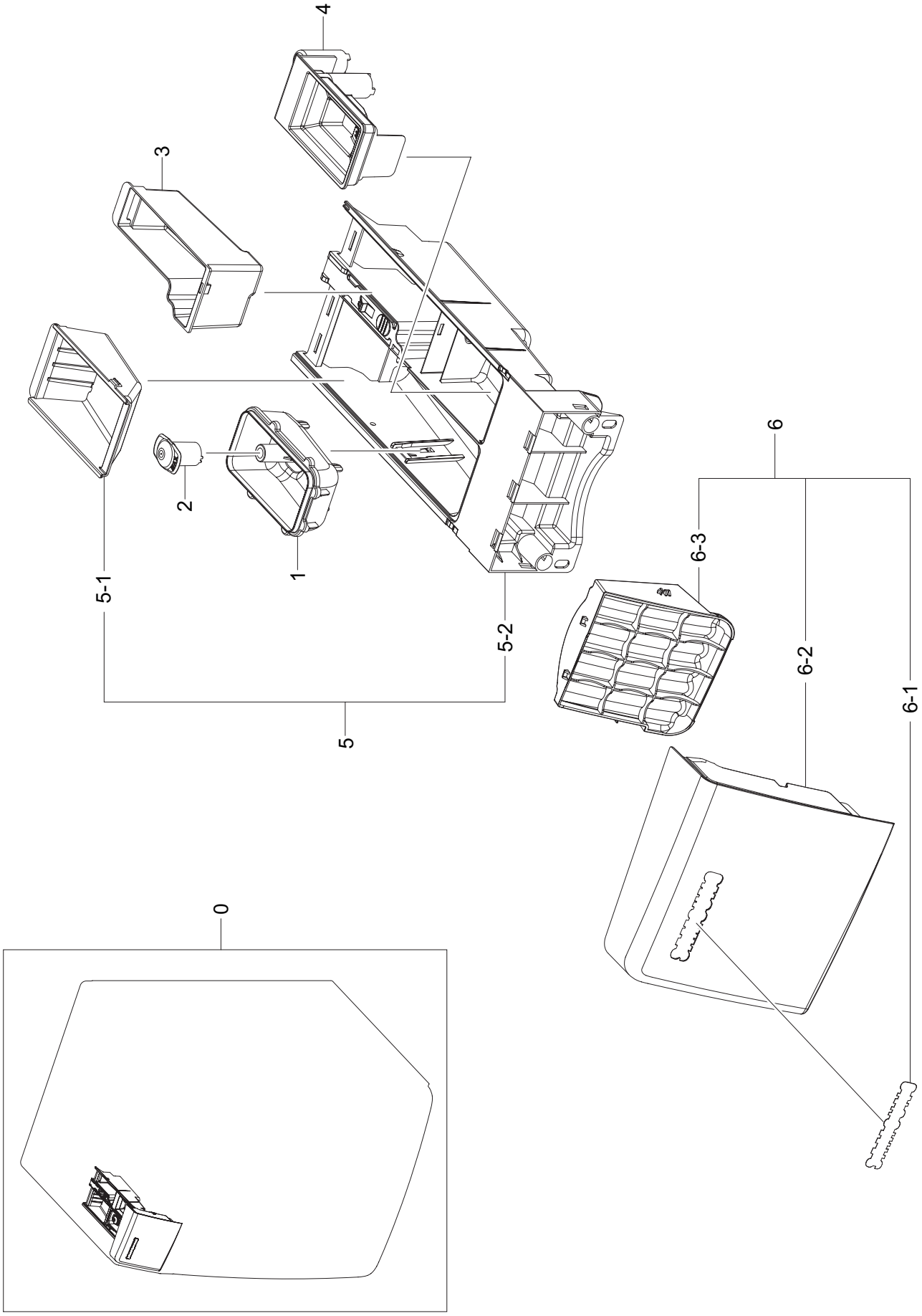

MODEL CODE: WF419AAW/XAA

Service Bom (**SA**: SERVICE AVAILABLE, **SNA**: SERVICE NOT AVAILABLE)

Drawing No.	Code No.	Description	Specification	QTY	Un	SA/SNA
0	DC97-15590A	ASSY DRAWER	ACE-PJT,WF419AAW/XAA,NEAT-WH	1	PC	SA
1	DC61-02427A	GUIDE-LIQUID(M)	WF419HAW,PP,BLUE,ACE-PJT	1	PC	SA
2	DC67-00420A	CAP-DRAWER	WF419HAW,PP,T2.0,W43,L38,WHT,	1	PC	SA
3	DC61-01995A	CASE-BLEACH	WF448AAW,PP,-,-,-,SOAF-BLUE,	1	PC	SNA
4	DC67-00305A	CAP-RINSE	WF448AAW,PP,-,-,-,SOAF-BLUE,PU	1	PC	SA
5	DC97-14481D	ASSY S.DRAWER	ACE-PJT,592-495090,TEFRON	1	PC	SA
5-1	DC61-01267A	CASE-PRE WASH	WINGS-PJT,PP(TB53),-,-,-,W	1	PC	SC
5-2	DC61-01992C	BODY-DRAWER	592-495090,PP,T2.0,L327.5,W1	1	PC	SA
6	DC97-15592A	ASSY PANEL DRAWER	ACE-PJT,WF419AAW/XAA,-	1	PC	SA
6-1	DC64-01387A	MASCOT	FRONTIER II,NICKEL,-,-,-,-,-,-	1	PC	SNA
6-2	DC64-01843A	PANEL-DRAWER	WF419AAW/XAA,ABS,T2.5,W208.	1	PC	SNA
6-3	DC64-01860A	DECORATION-PANEL DRAWER	WF419AAW/XAA,ABS	1	PC	SNA

MODEL CODE: WF419AAU/XAA

Service Bom (**SA**: SERVICE AVAILABLE, **SNA**: SERVICE NOT AVAILABLE)

Drawing No.	Code No.	Description	Specification	QTY	Un	SA/SNA
0	DC97-15590G	ASSY DRAWER	ACE-PJT,WF419AAU/XAA,BLUE-ST	1	PC	SA
1	DC61-02427A	GUIDE-LIQUID(M)	WF419HAW,PP,BLUE,ACE-PJT	1	PC	SA
2	DC67-00420A	CAP-DRAWER	WF419HAW,PP,T2.0,W43,L38,WHT,	1	PC	SA
3	DC61-01995A	CASE-BLEACH	WF448AAW,PP,-,-,-,SOAF-BLUE,	1	PC	SNA
4	DC67-00305A	CAP-RINSE	WF448AAW,PP,-,-,-,SOAF-BLUE,PU	1	PC	SA
5	DC97-14481E	ASSY S.DRAWER	PURPLE,WF448,TEFRON COATIN	1	PC	SA
5-1	DC61-02445A	CASE-PRE WASH	ACE-PJT,PP,T1.8,WHT,TB53	1	PC	SA
5-2	DC61-01992C	BODY-DRAWER	592-495090,PP,T2.0,L327.5,W1	1	PC	SA
6	DC97-15592D	ASSY PANEL DRAWER	ACE-PJT,WF419AAU/XAA,B	1	PC	SA
6-1	DC64-01387A	MASCOT	FRONTIER II,NICKEL,-,-,-,-,-,-	1	PC	SNA
6-2	DC64-01843C	PANEL-DRAWER	WF419AAU/XAA,ABS,T2.5,W208.	1	PC	SA
6-3	DC64-01860A	DECORATION-PANEL DRAWER	WF419AAW/XAA,ABS	1	PC	SNA

MODEL CODE: WF409SNL/XAC

Service Bom (**SA**: SERVICE AVAILABLE, **SNA**: SERVICE NOT AVAILABLE)

Drawing No.	Code No.	Description	Specification	QTY	Un	SA/SNA
0	DC97-15590C	ASSY DRAWER	ACE-PJT_BETTER,WF409SNL	1	PC	SA
1	DC61-02427A	GUIDE-LIQUID(M)	WF419HAW,PP,BLUE,ACE-PJT	1	PC	SA
2	DC67-00420A	CAP-DRAWER	WF419HAW,PP,T2.0,W43,L38,WHT,	1	PC	SA
3	DC61-01995A	CASE-BLEACH	WF448AAW,PP,-,-,-,SOAF-BLUE,	1	PC	SNA
4	DC67-00305A	CAP-RINSE	WF448AAW,PP,-,-,-,SOAF-BLUE,PU	1	PC	SA
5	DC97-14481D	ASSY S.DRAWER	ACE-PJT,592-495090,TEFRON	1	PC	SA
5-1	DC61-01267A	CASE-PRE WASH	WINGS-PJT,PP(TB53),-,-,-,W	1	PC	SC
5-2	DC61-01992C	BODY-DRAWER	592-495090,PP,T2.0,L327.5,W1	1	PC	SA
6	DC97-15592C	ASSY PANEL DRAWER	ACE-PJT_BETTER,WF409SN	1	PC	SA
6-1	DC64-01387A	MASCOT	FRONTIER II,NICKEL,-,-,-,-,-,-	1	PC	SNA
6-2	DC64-01843B	PANEL-DRAWER	WF409SNL,ABS,T2.5,W208.5,L2	1	PC	SA
6-3	DC64-01860B	DECORATION-PANEL DRAWER	592-495090,ABS,T	1	PC	SA

5-8. ASS'Y HOUSING DRAWER

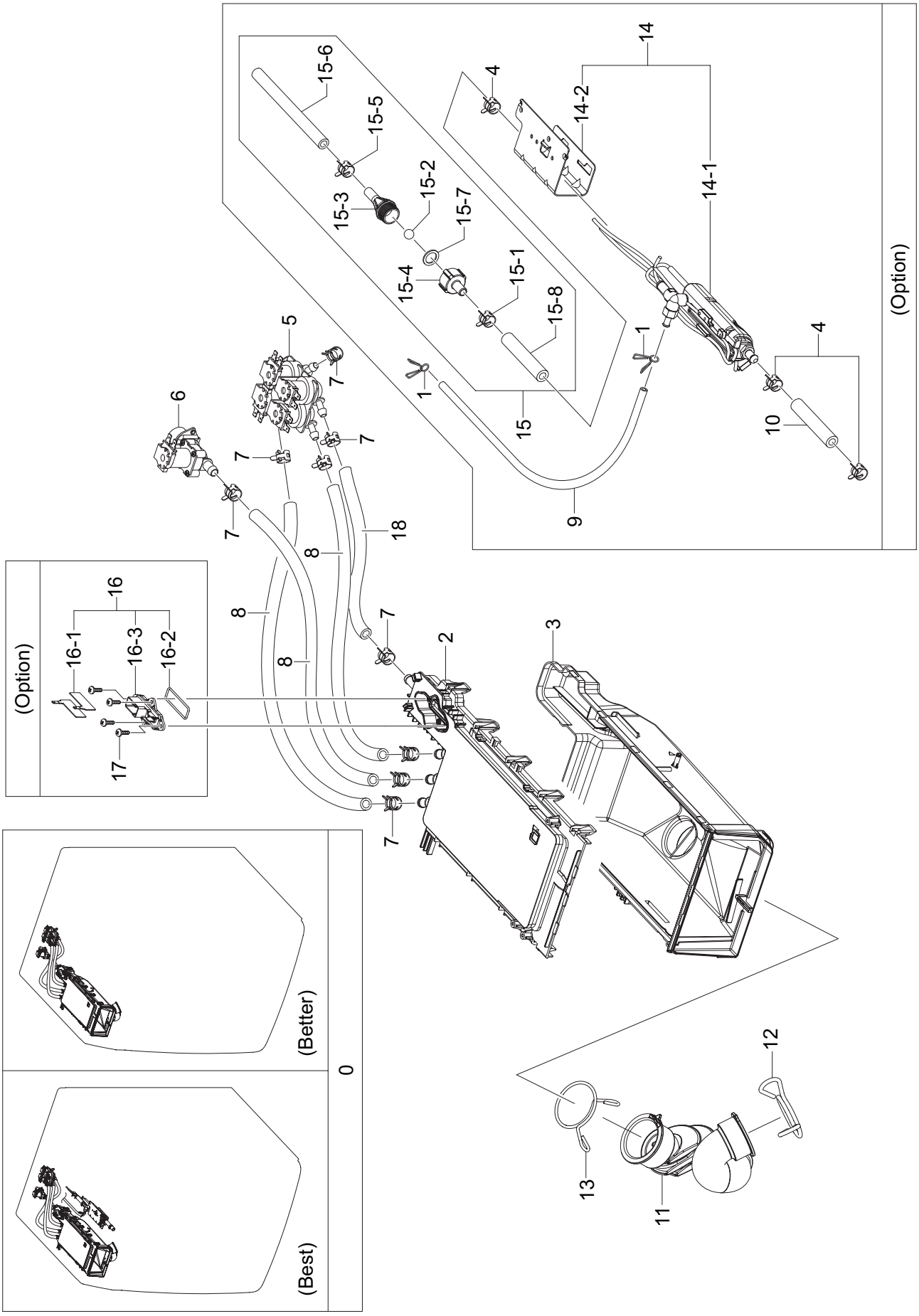

MODEL CODE: WF419AAW/XAA

Service Bom (**SA**: SERVICE AVAILABLE, **SNA**: SERVICE NOT AVAILABLE)

Drawing No.	Code No.	Description	Specification	QTY	Un	SA/SNA
0	DC97-15591A	ASSY HOUSING DRAWER	ACE-PJT,WF419AAW/XAA	1	PC	SNA
1	DC65-00008C	CLAMPER HOSE	DRUM W/M,SK5,-,ID9.0/OD10.5	2	PC	SNA
2	DC97-14493A	ASSY S.HOUSING DRAWER	WF438AAC,PURPLE-PJ	1	PC	SA
3	DC61-02302A	HOUSING-DRAWER(L)	WF419AAW/XAA,PP,T1.8,W	1	PC	SA
4	DC61-60067C	CLAMPER HOSE	-,SK5,-,ID15.5,WHT,-	3	PC	SNA
5	DC62-00214L	VALVE-WATER	PURPLE-PJT,P.P,1~8,BLU,4WAY(	1	PC	SA
6	DC62-30314K	VALVE-WATER	V-0117,NYLON #6,83x45,1~8(10	1	PC	SA
7	DC65-00008A	CLAMPER HOSE	SEW-DR605,SK5,-,-,YEL,ID14.	9	PC	SNA
8	DC67-00051B	HOSE-DRAWER	Q1636GW/XEU,EPDM,ID9.0,OD14.	1.97	M	SA
9	DC67-00089T	HOSE-WATER	WF419AAW,SILICON,ID5.0,OD9.0,	1	PC	SNA
10	DC67-00181F	HOSE-INLET	PURPLE,SILICON,ID9.3,OD16.5,-	1	PC	SA
11	DC67-00380A	HOSE-DRAWER TUB	WF419AAW/XAA,EPDM,ID48,O	1	PC	SA
12	DC72-00001F	BAND-RING	SEW-HTR122L,HSWR,Φ3.0,-,ID Φ44	1	PC	SNA
13	DC72-00001G	BAND-RING	HEBA-PJT,HSWR,PI3.0,W21.5,ID49	1	PC	SNA
14	DC97-09101F	ASSY STEAM KIT	FRONTIER2-STEAM,WF338AAR,	1	PC	SA
14-1	DC97-08734E	ASSY STEAMER	PURPLE-PJT,-,120V/60Hz,900W	1	PC	SNA
14-2	DC61-02010B	BRACKET-STEAMER	WF338AAR,GI,T1.4,-,-,-,F	1	PC	SNA
15	DC97-12578C	ASSY HOSE	PURPLE-PJT,-,HOSE CONNECTING A	1	PC	SNA
15-1	DC61-60067C	CLAMPER HOSE	-,SK5,-,ID15.5,WHT,-	1	PC	SNA
15-2	DC62-00167A	NOZZLE-BALL	Q1636GW,SILICON,-,-,-,-,-,TS	1	PC	SA
15-3	DC62-00182A	NOZZLE-CONNECTOR(U)	Q1636,PC,D24,-,-,-,T	1	PC	SA
15-4	DC62-00183A	NOZZLE-CONNECTOR(L)	Q1636,PC,D24,-,-,-,T	1	PC	SA
15-5	DC65-00008A	CLAMPER HOSE	SEW-DR605,SK5,-,-,YEL,ID14.	1	PC	SNA
15-6	DC67-00051B	HOSE-DRAWER	Q1636GW/XEU,EPDM,ID9.0,OD14.	0.27	M	SA
15-7	DC69-00640A	PACKING-FILTER	DRUM W/M,SILICIN,-,T2.5,-	1	PC	SA
15-8	DC67-00181D	HOSE-INLET	PURPLE-PJT,SILICON,ID 9.3,OD	1	PC	SA
16	DC97-13059A	ASSY GUIDE WATER	SEW-HER107ARK,AG+ ASSY/	1	PC	SA
16-1	DC61-01140A	PLATE-SILVER	-,SILVER,T0.8,W15,L40,-,-	2	PC	SNA
16-2	DC62-00237A	SEAL-CAP GUIDE	AG+,SILICON,NTR,T2.0,W17,	1	PC	SNA
16-3	DC67-00257A	CAP-GUIDE WATER	ABS,W75.0,L39,WHITE,AG+	1	PC	SA
17	6002-000234	SCREW-TAPPING	TH,+,-,2S,M4,L16,ZPC(WHT),	4	PC	SNA
18	DC67-00365B	HOSE-DRAWER	WF419,EPDM,ID9.0,OD14.5,T2.7	1	PC	SNA

MODEL CODE: WF419AAU/XAA

Service Bom (**SA**: SERVICE AVAILABLE, **SNA**: SERVICE NOT AVAILABLE)

Drawing No.	Code No.	Description	Specification	QTY	Un	SA/SNA
0	DC97-15591A	ASSY HOUSING DRAWER	ACE-PJT,WF419AAW/XAA	1	PC	SNA
1	DC65-00008C	CLAMPER HOSE	DRUM W/M,SK5,-,ID9.0/OD10.5	2	PC	SNA
2	DC97-14493A	ASSY S.HOUSING DRAWER	WF438AAC,PURPLE-PJ	1	PC	SA
3	DC61-02302A	HOUSING-DRAWER(L)	WF419AAW/XAA,PP,T1.8,W	1	PC	SA
4	DC61-60067C	CLAMPER HOSE	-,SK5,-,ID15.5,WHT,-	3	PC	SNA
5	DC62-00214L	VALVE-WATER	PURPLE-PJT,P.P,1~8,BLU,4WAY(	1	PC	SA
6	DC62-30314K	VALVE-WATER	V-0117,NYLON #6,83x45,1~8(10	1	PC	SA
7	DC65-00008A	CLAMPER HOSE	SEW-DR605,SK5,-,-,YEL,ID14.	9	PC	SNA
8	DC67-00051B	HOSE-DRAWER	Q1636GW/XEU,EPDM,ID9.0,OD14.	1.73	M	SA
9	DC67-00089T	HOSE-WATER	WF419AAW,SILICON,ID5.0,OD9.0,	1	PC	SNA
10	DC67-00181F	HOSE-INLET	PURPLE,SILICON,ID9.3,OD16.5,-	1	PC	SA
11	DC67-00380A	HOSE-DRAWER TUB	WF419AAW/XAA,EPDM,ID48,O	1	PC	SA
12	DC72-00001F	BAND-RING	SEW-HTR122L,HSWR,Φ3.0,-,ID Φ44	1	PC	SNA
13	DC72-00001G	BAND-RING	HEBA-PJT,HSWR,PI3.0,W21.5,ID49	1	PC	SA
14	DC97-09101F	ASSY STEAM KIT	FRONTIER2-STEAM,WF338AAR,	1	PC	SA
14-1	DC97-08734E	ASSY STEAMER	PURPLE-PJT,-,120V/60Hz,900W	1	PC	SNA
14-2	DC61-02010B	BRACKET-STEAMER	WF338AAR,GI,T1.4,-,-,-,F	1	PC	SNA
15	DC97-12578C	ASSY HOSE	PURPLE-PJT,-,HOSE CONNECTING A	1	PC	SNA
15-1	DC61-60067C	CLAMPER HOSE	-,SK5,-,ID15.5,WHT,-	1	PC	SNA
15-2	DC62-00167A	NOZZLE-BALL	Q1636GW,SILICON,-,-,-,-,-,-,TS	1	PC	SA
15-3	DC62-00182A	NOZZLE-CONNECTOR(U)	Q1636,PC,D24,-,-,-,T	1	PC	SA
15-4	DC62-00183A	NOZZLE-CONNECTOR(L)	Q1636,PC,D24,-,-,-,T	1	PC	SA
15-5	DC65-00008A	CLAMPER HOSE	SEW-DR605,SK5,-,-,YEL,ID14.	1	PC	SNA
15-6	DC67-00051B	HOSE-DRAWER	Q1636GW/XEU,EPDM,ID9.0,OD14.	0.27	M	SA
15-7	DC69-00640A	PACKING-FILTER	DRUM W/M,SILICIN,-,T2.5,-	1	PC	SA
15-8	DC67-00181D	HOSE-INLET	PURPLE-PJT,SILICON,ID 9.3,OD	1	PC	SA
16	DC97-13059A	ASSY GUIDE WATER	SEW-HER107ARK,AG+ ASSY/	1	PC	SA
16-1	DC61-01140A	PLATE-SILVER	-,SILVER,T0.8,W15,L40,-,-	2	PC	SNA
16-2	DC62-00237A	SEAL-CAP GUIDE	AG+,SILICON,NTR,T2.0,W17,	1	PC	SNA
16-3	DC67-00257A	CAP-GUIDE WATER	ABS,W75.0,L39,WHITE,AG+	1	PC	SA
17	6002-000234	SCREW-TAPPING	TH,+,-,2S,M4,L16,ZPC(WHT),	4	PC	SNA
18	DC67-00365B	HOSE-DRAWER	WF419,EPDM,ID9.0,OD14.5,T2.7	1	PC	SA

MODEL CODE: WF409SNL/XAC

Service Bom (**SA**: SERVICE AVAILABLE, **SNA**: SERVICE NOT AVAILABLE)

Drawing No.	Code No.	Description	Specification	QTY	Un	SA/SNA
0	DC97-15591C	ASSY HOUSING DRAWER	ACE-BETTER,WF409SNL	1	PC	SA
2	DC97-14493B	ASSY S.HOUSING DRAWER	PURPLE-K,WR-PA179U	1	PC	SA
3	DC61-02302B	HOUSING-DRAWER(L)	592-495090,PP,T1.8,W16	1	PC	SA
5	DC62-00214L	VALVE-WATER	PURPLE-PJT,P.P,1~8,BLU,4WAY(	1	PC	SA
6	DC62-30314K	VALVE-WATER	V-0117,NYLON #6,83x45,1~8(10	1	PC	SA
7	DC65-00008A	CLAMPER HOSE	SEW-DR605,SK5,-,-,YEL,ID14.	10	PC	SNA
8	DC67-00051B	HOSE-DRAWER	Q1636GW/XEU,EPDM,ID9.0,OD14.	1.75	M	SA
11	DC67-00380A	HOSE-DRAWER TUB	WF419AAW/XAA,EPDM,ID48,O	1	PC	SA
12	DC72-00001F	BAND-RING	SEW-HTR122L,HSWR,Φ3.0,-,ID Φ44	1	PC	SNA
13	DC72-00001G	BAND-RING	HEBA-PJT,HSWR,PI3.0,W21.5,ID49	1	PC	SNA
18	DC67-00365B	HOSE-DRAWER	WF419,EPDM,ID9.0,OD14.5,T2.7	1	PC	SNA

5-9. SMALL PARTS

1	2	3	4	5	6	7	8	9
10	11	12	13	14				

MODEL CODE: WF419AAW/XAA

Service Bom (**SA**: SERVICE AVAILABLE, **SNA**: SERVICE NOT AVAILABLE)

Drawing No.	Code No.	Description	Specification		QTY	Un	SA/ SNA
1	DC61-01736B	HOLDER-WIRE	WF337AAW,NYLON66,OD31,H15,L1	FRAME(HOSE-DRAIN)	1	PC	SNA
2	DC61-40083A	HOLDER-WIRE	DAWH-3ND,NYLON66,-,-,-,-,NTR	PLATE-BOTTOM	3	PC	SNA
3	DC61-60074A	HOLDER-WIRE	-,NYLON#66(DAWS-6NB),-,-,-,N	FRAME-PLATE(U)	1	PC	SA
4	DC61-00553B	HOLDER-WIRE SADDLE	-,NYLON66,-,-,-,NTR,D	FRAME-PLATE(U)	1	PC	SA
5	DC61-40081A	HOLDER-WIRE	DAWH-2NC,NYLON66,-,-,-,-,NTR	FRAME(FRONT-RIGHT), (REAR-LEFT)	5	PC	SNA
5	DC61-40081A	HOLDER-WIRE	DAWH-2NC,NYLON66,-,-,-,-,NTR	BOTTOM-P(PUMP,3P), PLATE-BOTTOM	5	PC	SNA
5	DC61-40081A	HOLDER-WIRE	DAWH-2NC,NYLON66,-,-,-,-,NTR	GUIDE-WIRE	2	PC	SNA
6	DC61-00133A	CLAMPER HOSE-FIX	P1291,PP,ID24.5,OD29.5,	FRAME	1	PC	SNA
7	DC65-20008C	CABLE CLAMP	DA-8N,-,ID13.2/T1.0,NYLON#66	TUB-BACK+W/HARNESS	2	PC	SA
8	6502-000168	CABLE CLAMP	DA-6N,ID10.0,T1.0,NYLON6/6,N	TUB-FRONT+W/HARNESS	1	PC	SA
9	6502-000154	CABLE CLAMP	DAFC-2500,-,T15,NYLON#6/6,NT	CABLE-CLAMP	1	PC	SNA
10	6502-000127	CABLE CLAMP	DAWH-18NB,ID15,-,NYLON66,NTR	FRAME(BACK, VALVE), (FRONT-RIGHT), (FILTER)	3	PC	SNA
10	6502-000127	CABLE CLAMP	DAWH-18NB,ID15,-,NYLON66,NTR	BOTTOM-P(FRONT)	1	PC	SNA
11	6501-000121	CABLE TIE	DA-368,T1.9,W7.5,L368,NTR,NYLO	ACCESSORY	1	PC	SNA
12	DC61-00118A	CLAMPER HOSE-FIX	P1291,LYLON6/6,ID27,OD3	HOSE-PUMP+FRAME	1	PC	SNA
12	DC61-00118A	CLAMPER HOSE-FIX	P1291,LYLON6/6,ID27,OD3	HOSE-PUMP+FRAME	1	PC	SNA
13	DC61-00995B	HOLDER-WIRE	SEW-5HW115AN,NYLON66,-,-,128	PLATE-BOTTOM	1	PC	SNA
14	DC61-00999A	HOLDER-WIRE	TS85-PJT,NYLON66,-,-,-,NTR,D	TUB-BACK	1	PC	SNA

MODEL CODE: WF419AAU/XAA

Service Bom (**SA**: SERVICE AVAILABLE, **SNA**: SERVICE NOT AVAILABLE)

Drawing No.	Code No.	Description	Specification		QTY	Un	SA/ SNA
1	DC61-01736B	HOLDER-WIRE	WF337AAW,NYLON66,OD31,H15,L1	FRAME(HOSE-DRAIN)	1	PC	SNA
2	DC61-40083A	HOLDER-WIRE	DAWH-3ND,NYLON66,-,-,-,-,NTR	PLATE-BOTTOM	3	PC	SNA
3	DC61-60074A	HOLDER-WIRE	-,NYLON#66(DAWS-6NB),-,-,-,N	FRAME-PLATE(U)	1	PC	SA
4	DC61-00553B	HOLDER-WIRE SADDLE	-,NYLON66,-,-,-,NTR,D	FRAME-PLATE(U)	1	PC	SA
5	DC61-40081A	HOLDER-WIRE	DAWH-2NC,NYLON66,-,-,-,-,NTR	FRAME(FRONT-RIGHT), (REAR-LEFT)	5	PC	SNA
5	DC61-40081A	HOLDER-WIRE	DAWH-2NC,NYLON66,-,-,-,-,NTR	BOTTOM-P(PUMP,3P), PLATE-BOTTOM	5	PC	SNA
5	DC61-40081A	HOLDER-WIRE	DAWH-2NC,NYLON66,-,-,-,-,NTR	GUIDE-WIRE1ST_2ND, WIRE3RD	3	PC	SNA
6	DC61-00133A	CLAMPER HOSE-FIX	P1291,PP,ID24.5,OD29.5,	FRAME	1	PC	SNA
7	DC65-20008C	CABLE CLAMP	DA-8N,-,ID13.2/T1.0,NYLON#66	TUB-BACK+W/HARNESS	2	PC	SA
8	6502-000168	CABLE CLAMP	DA-6N,ID10.0,T1.0,NYLON6/6,N	TUB-FRONT+W/HARNESS	1	PC	SA
9	6502-000154	CABLE CLAMP	DAFC-2500,-,T15,NYLON#6/6,NT	CABLE-CLAMP	1	PC	SNA
10	6502-000127	CABLE CLAMP	DAWH-18NB,ID15,-,NYLON66,NTR	FRAME(BACK, VALVE), (FRONT-RIGHT), (FILTER)	3	PC	SNA
10	6502-000127	CABLE CLAMP	DAWH-18NB,ID15,-,NYLON66,NTR	BOTTOM-P(FRONT)	1	PC	SNA
11	6501-000121	CABLE TIE	DA-368,T1.9,W7.5,L368,NTR,NYLO	ACCESSORY	1	PC	SNA
12	DC61-00118A	CLAMPER HOSE-FIX	P1291,LYLON6/6,ID27,OD3	HOSE-PUMP+FRAME	1	PC	SNA
12	DC61-00118A	CLAMPER HOSE-FIX	P1291,LYLON6/6,ID27,OD3	HOSE-PUMP+FRAME	1	PC	SNA
13	DC61-00995B	HOLDER-WIRE	SEW-5HW115AN,NYLON66,-,-,128	PLATE-BOTTOM	1	PC	SNA
14	DC61-00999A	HOLDER-WIRE	TS85-PJT,NYLON66,-,-,-,NTR,D	TUB-BACK	1	PC	SNA

MODEL CODE: WF409SNL/XAC

Service Bom (**SA**: SERVICE AVAILABLE, **SNA**: SERVICE NOT AVAILABLE)

Drawing No.	Code No.	Description	Specification		QTY	Un	SA/ SNA
1	DC61-01736B	HOLDER-WIRE	WF337AAW,NYLON66,OD3 1,H15,L1	FRAME(HOSE-DRAIN)	1	PC	SNA
2	DC61-40083A	HOLDER-WIRE	DAWH-3ND,NYLON66,-,-,- ,-,NTR	PLATE-BOTTOM	3	PC	SNA
3	DC61-60074A	HOLDER-WIRE	-,NYLON#66(DAWS-6NB),- ,-,-,N	FRAME-PLATE(U)	1	PC	SA
4	DC61-00553B	HOLDER-WIRE SADDLE	-,NYLON66,-,-,-,NTR,D	FRAME-PLATE(U)	1	PC	SA
5	DC61-40081A	HOLDER-WIRE	DAWH-2NC,NYLON66,-,-,- ,-,NTR	GUIDE-WIRE1ST_2ND, WIRE3RD, WIRE4TH	4	PC	SNA
5	DC61-40081A	HOLDER-WIRE	DAWH-2NC,NYLON66,-,-,- ,-,NTR	FRAME(FRONT-RIGHT), (REAR-LEFT)	5	PC	SNA
5	DC61-40081A	HOLDER-WIRE	DAWH-2NC,NYLON66,-,-,- ,-,NTR	BOTTOM-P(PUMP,3P), PLATE-BOTTOM	5	PC	SNA
6	DC61-00133A	CLAMPER HOSE-FIX	P1291,PP,ID24.5,OD29.5,	FRAME	1	PC	SNA
7	DC65-20008C	CABLE CLAMP	DA-8N,-,ID13.2/ T1.0,NYLON#66	TUB-BACK+W/HARNESS	2	PC	SA
8	6502-000168	CABLE CLAMP	DA-6N,ID10.0,T1.0,NYLON6/ 6,N	TUB-FRONT+W/HARNESS	1	PC	SA
9	6502-000154	CABLE CLAMP	DAFC-2500,-,T15,NYLON#6/ 6,NT	CABLE-CLAMP	1	PC	SNA
10	6502-000127	CABLE CLAMP	DAWH-18NB,ID15,- ,NYLON66,NTR	FRAME(BACK, VALVE), (FILTER), (FRONT-RIGHT)	3	PC	SNA
10	6502-000127	CABLE CLAMP	DAWH-18NB,ID15,- ,NYLON66,NTR	BOTTOM-P(FRONT)	1	PC	SNA
11	6501-000121	CABLE TIE	DA-368,T1.9,W7.5,L368,NT R,NYLO	ACCESSORY	1	PC	SNA
12	DC61-00118A	CLAMPER HOSE-FIX	P1291,LYLON6/6,ID27,OD3	HOSE-PUMP+FRAME	1	PC	SNA
12	DC61-00118A	CLAMPER HOSE-FIX	P1291,LYLON6/6,ID27,OD3	HOSE-PUMP+FRAME	1	PC	SNA
13	DC61-00995B	HOLDER-WIRE	SEW-5HW115AN,NYLON66,- ,-,128	PLATE-BOTTOM	1	PC	SNA
14	DC61-00999A	HOLDER-WIRE	TS85-PJT,NYLON66,-,-,- ,NTR,D	TUB-BACK	1	PC	SNA

5-10. PARTS LIST (OTHERS PARTS)

MODEL CODE: WF419AAW/XAA

Service Bom (**SA**: SERVICE AVAILABLE, **SNA**: SERVICE NOT AVAILABLE)

Code No.	Description	Specification	QTY	Un	SA/SNA
3405-001083	SWITCH-MICRO	250Vac,2A,180gf,3	1	PC	SA
3501-001154	RELAY-MINIATURE	12Vdc,200mW,3000mA,1Form	8	PC	SA
3501-001206	RELAY-POWER	12V DC,0.9W,-,-,20MS,10MS	1	PC	SA
6001-001773	SCREW-MACHINE	TH,+,-,M5,L12,PASS,STS430,	2	PC	SA
6002-000213	SCREW-TAPPING	TH,+,-,1,M4,L12,ZPC(WHT),S	2	PC	SA
6002-000213	SCREW-TAPPING	TH,+,-,1,M4,L12,ZPC(WHT),S	5	PC	SA
6002-000213	SCREW-TAPPING	TH,+,-,1,M4,L12,ZPC(WHT),S	3	PC	SA
6002-000213	SCREW-TAPPING	TH,+,-,1,M4,L12,ZPC(WHT),S	3	PC	SA
6009-001367	SCREW-HEX	HWH,+,-,M6.5,L32,ZPC(WHT),SWRC	12	PC	SA
6009-001476	SCREW-HEX	HEX,+,-,M5,L10,ZPC3(BLK),SWRCH	2	PC	SA
6011-001548	BOLT-ETC	M7.5,L30,ZPC(YEL),SWRCH18A,HEX,	20	PC	SA
6011-001565	BOLT-HEX	M6,L35.1,ZPC(YEL),SWCH25K,TAPPI	2	PC	SA
6011-001627	BOLT-ETC	M6,L56,MFZn,SCM435,P1.0/HEX/WSP	6	PC	SA
DC13-00206A	PLD-MICOM	TMP88FW45FG,QFP,80PIN	1	PC	SA
DC68-02497C	LABEL TAG-WASH GUIDE	592-49107,SEARS,ART	1	PC	SA
DC68-02580C	MANUAL-GUIDE	WF218,ENG/SPE/FRE,100MOJO,W	1	PC	SA
DC68-02676A	LABEL-ENERGY	WF419AAW/XAA,SEA,MOJO,-,W14	1	PC	SA
DC72-00012L	SPONGE-SHUTTER	PURPLE-PJT,PE-FOAM,-,T33,	1	PC	SA
DC72-00013J	SPONGE-HARNESS	SEW-5G105A,PU-FOAM,-,T5.0	2	PC	SA
DC97-02412A	ASSY BOLT	SWF-P12,MOTOR/ M8*L62,-,-,-,-	2	PC	SA
6003-000226	SCREW-TAPTYPE	TH,+,-,S,M4,L8,ZPC(WHT),SW	2	PC	SC
6003-000226	SCREW-TAPTYPE	TH,+,-,S,M4,L8,ZPC(WHT),SW	4	PC	SC

MODEL CODE: WF419AAU/XAA

Service Bom (**SA**: SERVICE AVAILABLE, **SNA**: SERVICE NOT AVAILABLE)

Code No.	Description	Specification	QTY	Un	SA/SNA
3405-001083	SWITCH-MICRO	250Vac,2A,180gf,3	1	PC	SA
3501-001154	RELAY-MINIATURE	12Vdc,200mW,3000mA,1Form	8	PC	SA
3501-001206	RELAY-POWER	12V DC,0.9W,-,-,20MS,10MS	1	PC	SA
6001-001773	SCREW-MACHINE	TH,+,-,M5,L12,PASS,STS430,	2	PC	SA
6002-000213	SCREW-TAPPING	TH,+,-,1,M4,L12,ZPC(WHT),S	5	PC	SA
6002-000213	SCREW-TAPPING	TH,+,-,1,M4,L12,ZPC(WHT),S	3	PC	SA
6002-000213	SCREW-TAPPING	TH,+,-,1,M4,L12,ZPC(WHT),S	3	PC	SA
6002-000213	SCREW-TAPPING	TH,+,-,1,M4,L12,ZPC(WHT),S	2	PC	SA
6006-001170	SCREW-TAPPING	TH,+,WT,TC,M4,L10,ZPC(WHT)	1	PC	SA
6009-001367	SCREW-HEX	HWH,+,-,M6.5,L32,ZPC(WHT),SWRC	12	PC	SA
6009-001476	SCREW-HEX	HEX,+,M5,L10,ZPC(WHT),SWRCH18A	2	PC	SA
6011-001548	BOLT-ETC	M7.5,L30,ZPC(YEL),SWRCH18A,HEX,	20	PC	SA
6011-001565	BOLT-HEX	M6,L35.1,ZPC(YEL),SWCH25K,TAPPI	2	PC	SA
6011-001627	BOLT-ETC	M6,L56,MFZn,SCM435,P1.0/HEX/WSP	6	PC	SA
DC13-00206A	PLD-MICOM	TMP88FW45FG,QFP,80PIN	1	PC	SA
DC68-02580C	MANUAL-GUIDE	WF218,ENG/SPE/FRE,100MOJO,W	1	PC	SA
DC68-02676A	LABEL-ENERGY	WF419AAW/XAA,SEA,MOJO,-,W14	1	PC	SA
DC72-00012L	SPONGE-SHUTTER	PURPLE-PJT,PE-FOAM,-,T33,	1	PC	SA
DC97-02412A	ASSY BOLT	SWF-P12,MOTOR/ M8*L62,-,-,-,-	2	PC	SA
6003-000226	SCREW-TAPTYPE	TH,+,-,S,M4,L8,ZPC(WHT),SW	4	PC	SC
6003-000226	SCREW-TAPTYPE	TH,+,-,S,M4,L8,ZPC(WHT),SW	2	PC	SC

MODEL CODE: WF409SNL/XAC

Service Bom (**SA**: SERVICE AVAILABLE, **SNA**: SERVICE NOT AVAILABLE)

Code No.	Description	Specification	QTY	Un	SA/SNA
3405-001083	SWITCH-MICRO	250Vac,2A,180gf,3	1	PC	SA
3501-001154	RELAY-MINIATURE	12Vdc,200mW,3000mA,1Form	8	PC	SA
6001-001773	SCREW-MACHINE	TH,+,-,M5,L12,PASS,STS430,	2	PC	SA
6002-000213	SCREW-TAPPING	TH,+,-,1,M4,L12,ZPC(WHT),S	5	PC	SA
6002-000213	SCREW-TAPPING	TH,+,-,1,M4,L12,ZPC(WHT),S	3	PC	SA
6002-000213	SCREW-TAPPING	TH,+,-,1,M4,L12,ZPC(WHT),S	3	PC	SA
6002-000213	SCREW-TAPPING	TH,+,-,1,M4,L12,ZPC(WHT),S	2	PC	SA
6009-001367	SCREW-HEX	HWH,+,-,M6.5,L32,ZPC(WHT),SWRC	12	PC	SA
6009-001476	SCREW-HEX	HEX,+,-,M5,L10,ZPC3(BLK),SWRCH	2	PC	SA
6011-001548	BOLT-ETC	M7.5,L30,ZPC(YEL),SWRCH18A,HEX,	20	PC	SA
6011-001565	BOLT-HEX	M6,L35.1,ZPC(YEL),SWCH25K,TAPPI	2	PC	SA
6011-001627	BOLT-ETC	M6,L56,MFZn,SCM435,P1.0/HEX/WSP	6	PC	SA
DC13-00206A	PLD-MICOM	TMP88FW45FG,QFP,80PIN	1	PC	SA
DC68-02497C	LABEL TAG-WASH GUIDE	592-49107,SEARS,ART	1	PC	SA
DC68-02580C	MANUAL-GUIDE	WF218,ENG/SPE/FRE,100MOJO,W	1	PC	SA
DC72-00012L	SPONGE-SHUTTER	PURPLE-PJT,PE-FOAM,-,T33,	1	PC	SA
DC72-00013J	SPONGE-HARNESS	SEW-5G105A,PU-FOAM,-,T5.0	2	PC	SA
DC97-02412A	ASSY BOLT	SWF-P12,MOTOR/ M8*L62,-,-,-,-	2	PC	SA
DC98-01050C	ASSY MANUAL BOOK	ACE_BETTER(User),WF409	1	PC	SA
6003-000226	SCREW-TAPTYPE	TH,+,-,S,M4,L8,ZPC(WHT),SW	2	PC	SC
6003-000226	SCREW-TAPTYPE	TH,+,-,S,M4,L8,ZPC(WHT),SW	4	PC	SC

5-11. PARTS LIST (SCREW PARTS)

MODEL CODE: WF419AAW/XAA

Service Bom (**SA**: SERVICE AVAILABLE, **SNA**: SERVICE NOT AVAILABLE)

Code No.	Description	Specification	QTY	Un	SA/SNA
6001-001773	SCREW-MACHINE	TH,+,-,M5,L12,PASS,STS430,	2	PC	SA
6002-000213	SCREW-TAPPING	TH,+,-,1,M4,L12,ZPC(WHT),S	14	PC	SA
6002-000234	SCREW-TAPPING	TH,+,-,2S,M4,L16,ZPC(WHT),	4	PC	SNA
6002-000239	SCREW-TAPPING	TH,+,-,2S,M4,L8,ZPC(WHT),S	14	PC	SA
6002-000444	SCREW-TAPPING	TH,+,-,2S,M4,L14,PASS,STS4	19	PC	SNA
6002-000524	SCREW-TAPPING	TH,+,-,2,M4,L20,ZPC(WHT),S	2	PC	SNA
6002-000630	SCREW-TAPPING	PH,+,-,2S,M3,L8,ZPC(WHT),S	2	PC	SNA
6002-000632	SCREW-TAPPING	PH,+,-,2S,M4,L16,ZPC(WHT),	3	PC	SNA
6002-001186	SCREW-TAPPING	TH,+,-,2,M5.5,L16,PASS,STS	9	PC	SA
6002-001204	SCREW-TAPPING	TH,+,-,1,M4,L16,PASS,STS43	8	PC	SA
6002-001279	SCREW-TAPPING	PWH,+,-,1,M4,L12,PASS,STS3	2	PC	SA
6002-001306	SCREW-TAPPING	TH,+,-,1,M4,L14,ZPC(WHT),S	10	PC	SNA
6003-000226	SCREW-TAPTYPE	TH,+,-,S,M4,L8,ZPC(WHT),SW	6	PC	SC
6006-001174	SCREW-TAPPING	TH,+,WE,2S,M4,L12,ZPC(WHT)	23	PC	SNA
6009-001367	SCREW-HEX	HWH,+,-,M6.5,L32,ZPC(WHT),SWRC	12	PC	SA
6009-001476	SCREW-HEX	HEX,+,-,M5,L10,ZPC3(BLK),SWRCH	2	PC	SA

MODEL CODE: WF419AAU/XAA

Service Bom (**SA**: SERVICE AVAILABLE, **SNA**: SERVICE NOT AVAILABLE)

Code No.	Description	Specification	QTY	Un	SA/SNA
6001-000115	SCREW-MACHINE	BH,+,-,M3,L10,ZPC(WHT),SWR	4	PC	SNA
6001-001668	SCREW-MACHINE	TH,+,M5,L16,PASS,STS430,FP	1	PC	SA
6001-001773	SCREW-MACHINE	TH,+,-,M5,L12,PASS,STS430,	2	PC	SA
6002-000213	SCREW-TAPPING	TH,+,-,1,M4,L12,ZPC(WHT),S	14	PC	SA
6002-000231	SCREW-TAPPING	TH,+,NO,2S,M4,L12,ZPC(WHT)	4	PC	SNA
6002-000234	SCREW-TAPPING	TH,+,-,2S,M4,L16,ZPC(WHT),	4	PC	SNA
6002-000239	SCREW-TAPPING	TH,+,-,2S,M4,L8,ZPC(WHT),S	14	PC	SA
6002-000444	SCREW-TAPPING	TH,+,2,M4,L14,PASS,STS430	19	PC	SNA
6002-000524	SCREW-TAPPING	TH,+,-,2,M4,L20,ZPC(WHT),S	2	PC	SNA
6002-000632	SCREW-TAPPING	PH,+,-,2S,M4,L16,ZPC(WHT),	3	PC	SNA
6002-001186	SCREW-TAPPING	TH,+,-,2,M5.5,L16,PASS,STS	9	PC	SA
6002-001204	SCREW-TAPPING	TH,+,-,1,M4,L16,PASS,STS43	8	PC	SA
6002-001279	SCREW-TAPPING	PWH,+,-,1,M4,L12,PASS,STS3	2	PC	SA
6002-001306	SCREW-TAPPING	TH,+,-,1,M4,L14,ZPC(WHT),S	10	PC	SNA
6003-000226	SCREW-TAPTYPE	TH,+,-,S,M4,L8,ZPC(WHT),SW	6	PC	SC
6006-001170	SCREW-TAPPING	TH,+,WT,TC,M4,L10,ZPC(WHT)	1	PC	SA
6006-001174	SCREW-TAPPING	TH,+,WE,2S,M4,L12,ZPC(WHT)	22	PC	SNA
6009-001367	SCREW-HEX	HWH,+,-,M6.5,L32,ZPC(WHT),SWRC	12	PC	SA
6009-001476	SCREW-HEX	HEX,+,M5,L10,ZPC(WHT),SWRCH18A	2	PC	SA

MODEL CODE: WF409SNL/XAC

Service Bom (**SA**: SERVICE AVAILABLE, **SNA**: SERVICE NOT AVAILABLE)

Code No.	Description	Specification	QTY	Un	SA/SNA
6001-000115	SCREW-MACHINE	BH,+,-,M3,L10,ZPC(WHT),SWR	2	PC	SNA
6001-001668	SCREW-MACHINE	TH,+,M5,L16,PASS,STS430,FP	1	PC	SA
6001-001773	SCREW-MACHINE	TH,+,-,M5,L12,PASS,STS430,	2	PC	SA
6002-000213	SCREW-TAPPING	TH,+,-,1,M4,L12,ZPC(WHT),S	14	PC	SA
6002-000239	SCREW-TAPPING	TH,+,-,2S,M4,L8,ZPC(WHT),S	14	PC	SA
6002-000444	SCREW-TAPPING	TH,+,-,2S,M4,L14,PASS,STS4	19	PC	SNA
6002-000524	SCREW-TAPPING	TH,+,-,2,M4,L20,ZPC(WHT),S	2	PC	SNA
6002-000630	SCREW-TAPPING	PH,+,-,2S,M3,L8,ZPC(WHT),S	2	PC	SNA
6002-000632	SCREW-TAPPING	PH,+,-,2S,M4,L16,ZPC(WHT),	3	PC	SNA
6002-001186	SCREW-TAPPING	TH,+,-,2,M5.5,L16,PASS,STS	9	PC	SA
6002-001204	SCREW-TAPPING	TH,+,-,1,M4,L16,PASS,STS43	8	PC	SA
6002-001279	SCREW-TAPPING	PWH,+,-,1,M4,L12,PASS,STS3	2	PC	SA
6002-001306	SCREW-TAPPING	TH,+,-,1,M4,L14,ZPC(WHT),S	10	PC	SNA
6003-000226	SCREW-TAPTYPE	TH,+,-,S,M4,L8,ZPC(WHT),SW	6	PC	SC
6006-001174	SCREW-TAPPING	TH,+,WE,2S,M4,L12,ZPC(WHT)	21	PC	SNA
6009-001367	SCREW-HEX	HWH,+,-,M6.5,L32,ZPC(WHT),SWRC	12	PC	SA
6009-001476	SCREW-HEX	HEX,+,-,M5,L10,ZPC3(BLK),SWRCH	2	PC	SA

6. PCB DIAGRAM

6-1. MAIN PCB

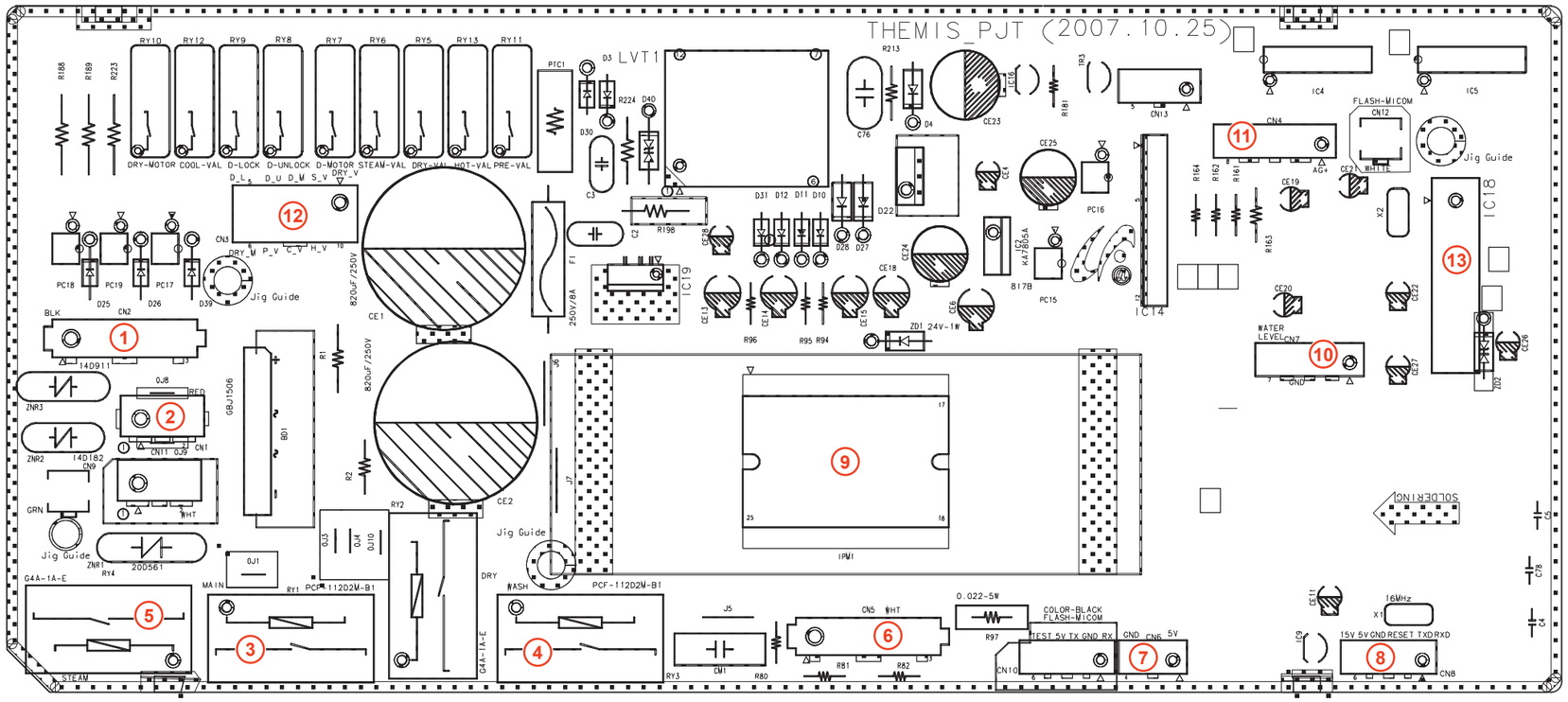

Location	Part No.	Function	Description
1	CN2	PBA Power Supply	Supplies 120V of AC power
2	CN1	Reactor Connection Port	Blocks noise generated when the motor operates.
3	RY1	Main Relay	Supplies PBA power when the Power button is pressed.
4	RY3	Washing Heater Relay	The switch for the Washing Heater power supply drive.
5	RY4	Steam Heater Relay (Only WF419***)	The switch for the Steam Heater power supply drive.
6	CN5	Motor Power Supply Port	Supplies the 3-phase drive voltage for the Washing Motor.
7	CN6	Hole Sensor Connection Port	Detects whether the Washing Motor is working normally.

Location	Part No.	Function	Description
8	CN8	SUB PBA Connection Port	Supplies power to the Sub PBA and provides a communications function.
9	IPM1	Washing Motor Drive IC	Switches and supplies the voltages for the motor.
10	CN7	Water Level And Temperature Sensor Connector	Detects the laundry, water supply, and water draining operations and detects whether each heater is working properly.
11	CN4	Door And Silver Nano Connector	Detects the door operations and supplies power for the Silver Nano.
12	CN3	Each Load Connection Port	The port to supply power for each electric device.
13	IC18	Ag IC (Only WF419***)	Drives the Ag IC.

6-2. CONNECTOR AND RELAY PORT PART DETAILED MANUAL (MAIN PCB)

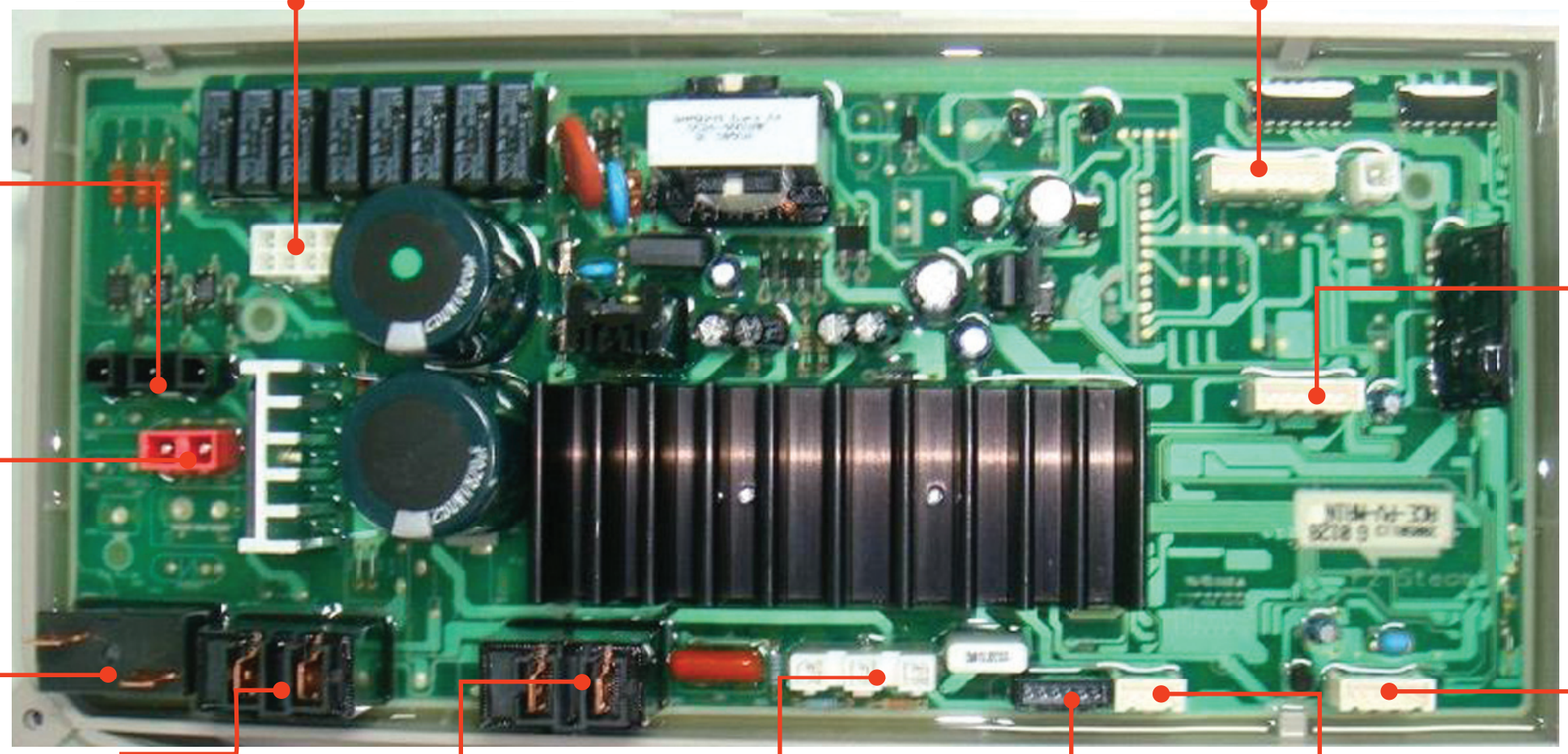

► **CN3**
1. Door Lock Close
2. Door Lock Open
3. Drain Pump
4. Steam Valve
5. Bleach Valve
6. Circulation Pump
7. Pre Valve
8. Main Valve
9. Hot Valve

► **CN4**
1. Door Switch
2. Empty Pin
3. Door Switch
4. Empty Pin
5. Empty Pin
6. Empty Pin
7. AG Sensor
8. AG Sensor

► **CN2**
1. AC Power Port
2. AC Power OFF Detection Sensor
3. Door Detection Sensor (LOCK, UNLOCK)

► **CN7**
1. Empty Pin
2. Empty Pin
3. Empty Pin
4. Washing Water Temperature Sensor
5. Ground
6. Washing Water Level Sensor
7. Washing Water Level Sensor

► **CN1**
1. Reactor Connection Port
2. Reactor Connection Port

► **CN8**
1. Communications Port (Rx)
2. Communications Port (Tx)
3. Rest Signal Output
4. Ground
5. 5V
6. 15V

► **RY4 (Only WF419***)**
1. Steam Heater Relay Switch
2. Steam Heater Relay Switch

► **RY1**
1. Main Power Relay Switch
2. Main Power Relay Switch

► **RY4**
1. Washing Heater Relay Switch
2. Washing Heater Relay Switch

► **CN5**
1. Motor Power (U Phase)
2. Motor Power (V Phase)
3. Motor Power (W Phase)

► **CN10**
1. AC OFF Check
2. Test Mode
3. 5V
4. Transmission Port
5. Ground
6. Input Port

► **CN6**
1. 5V
2. Hole Sensor Signal
3. Hole Sensor Signal
4. Ground

6-3. SUB PCB (BEST : WF419***)

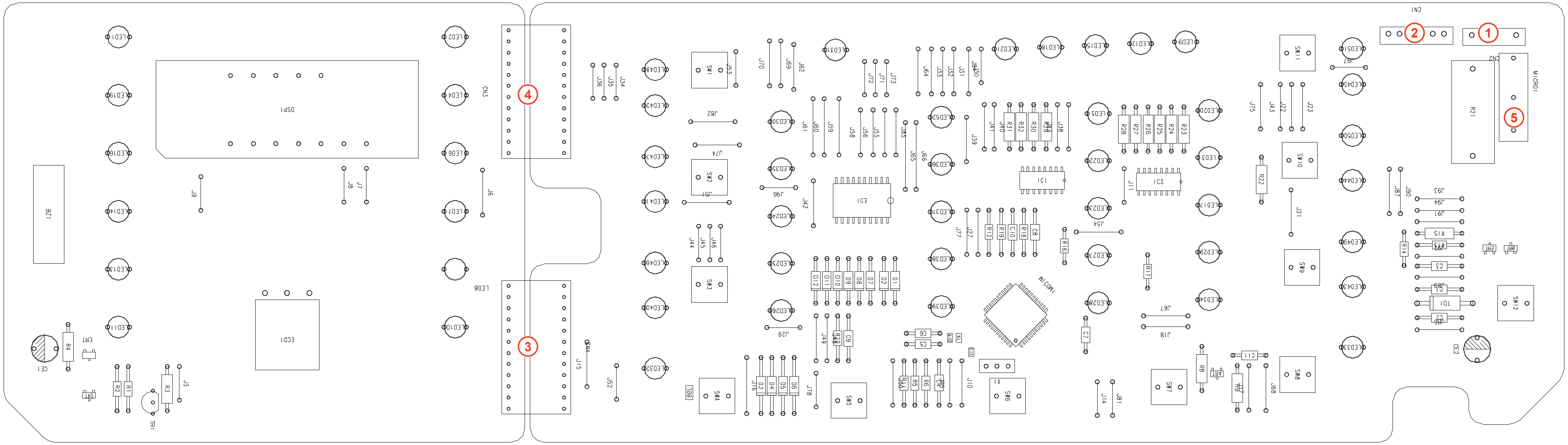

Location	Part No.	Function	Description
1	CN2	Power Connection Port	Receives power from the Main PBA and provides a communications function.
2	CN1	Main PBA Connection Port	Connects power.
3	CN4	PBA Connection Port	Connects the LED board and the Encoder switch board
4	CN3	PBA Connection Port	Connects the LED board and the Encoder switch board
5	MICRO1	Main S/W	Main Relay On/Off

6-4. CONNECTOR PORT PART DETAILED MANUAL (SUB PCB - BEST : WF419***)

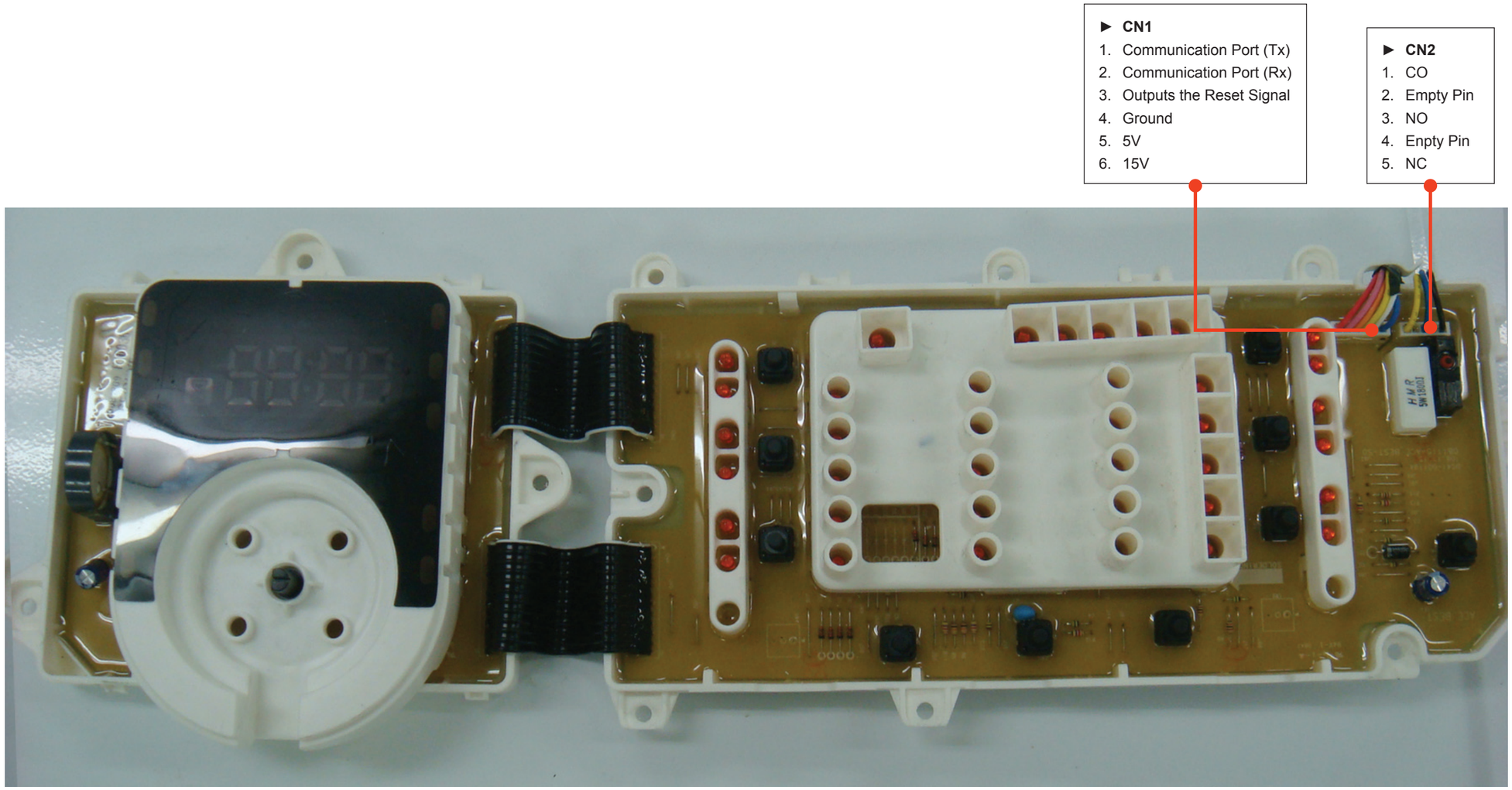

6-5. SUB PCB (BETTER : WF409***)

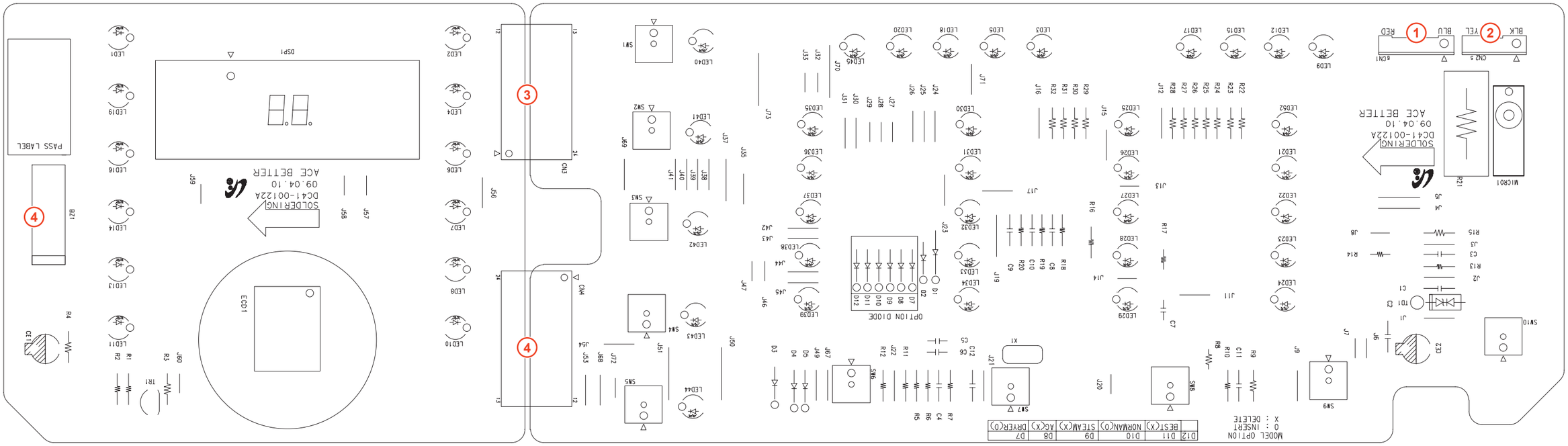

Location	Part No.	Function	Description
1	CN2	Power Connection Port	Connects Power
2	CN1	Main PCB Connection Port	Receives power from the Main PBA and provides a communication function
3	CN3, CN4	DISPLAY Connection Port	Connects the 1888 Board and the Graphics Board
4	BZ1	BUZZER Circuit	Generates sound when the Menu key is pressed, the Encoder operates and the menu is closed.

6-6. CONNECTOR PORT PART DETAILED MANUAL (SUB PCB - BETTER : WF409***)

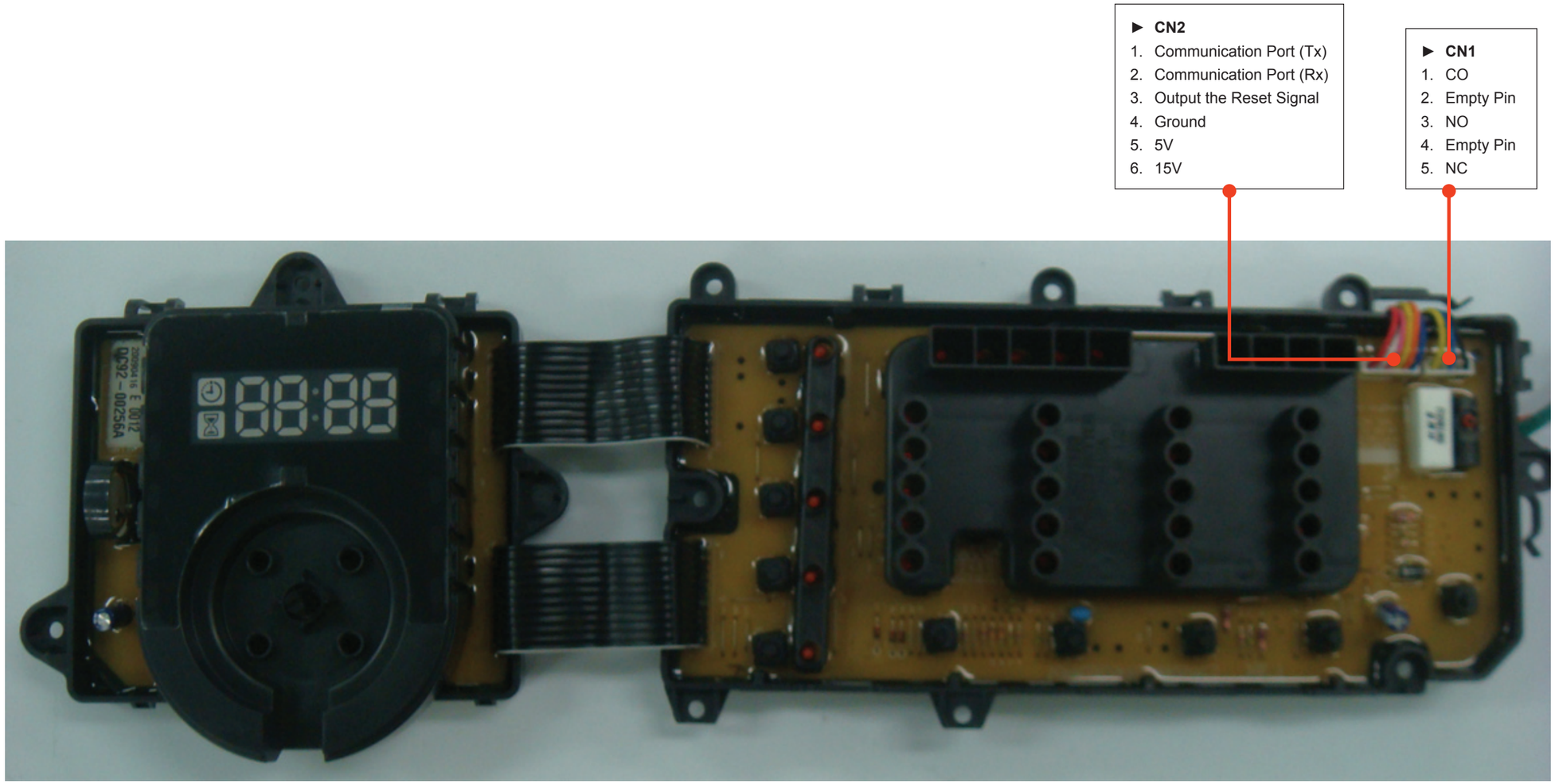

7. WIRING DIAGRAM

7-1. WIRING DIAGRAM

■ REFERENCE INFORMATION

BLK	BLACK
BLU	BLUE
GRN	GREEN
GRY	GRAY
NTR	NATURAL
ORG	ORANGE
PNK	PINK
RED	RED
SKYBLU	SKYBLUE
VIO	VIOLET
WHT	WHITE
YEL	YELLOW

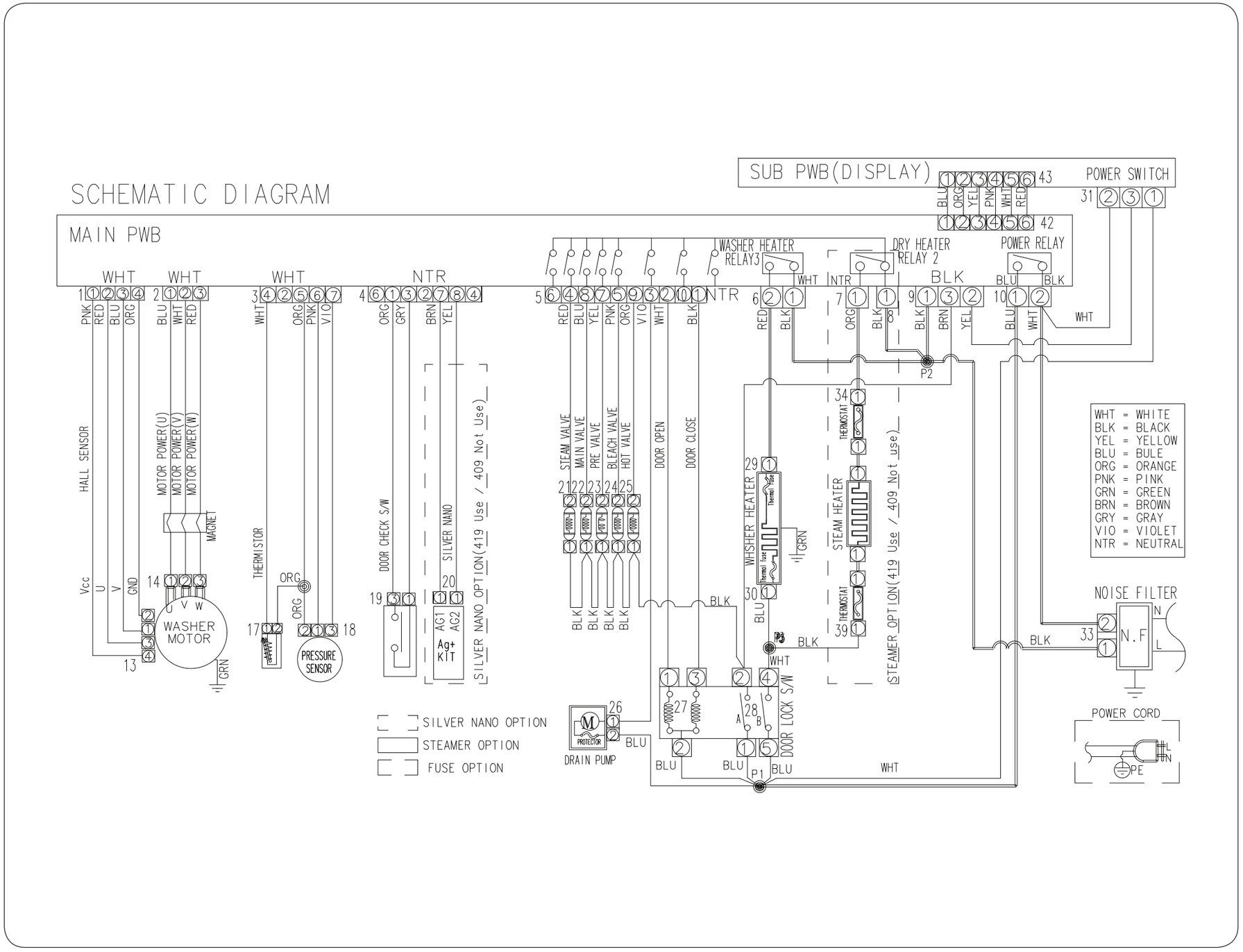

8. SCHEMATIC DIAGRAM

8-1. MAIN CONTROL

► This Document can not be used without Samsungs authorization.

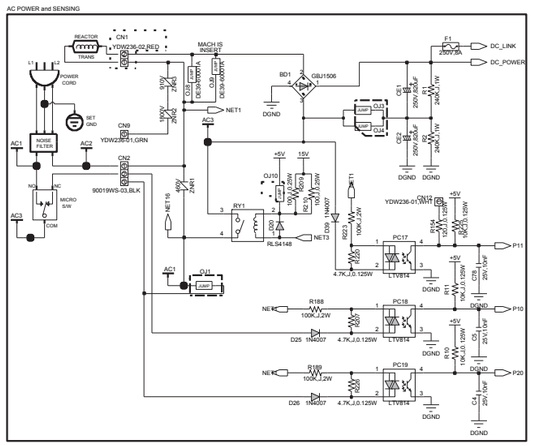

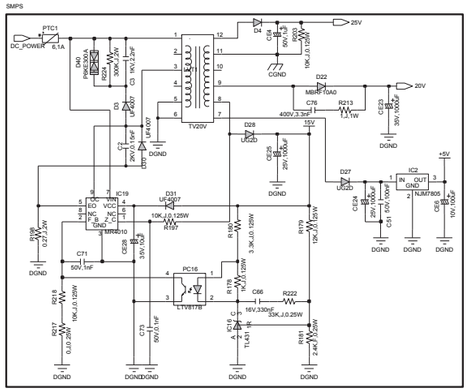

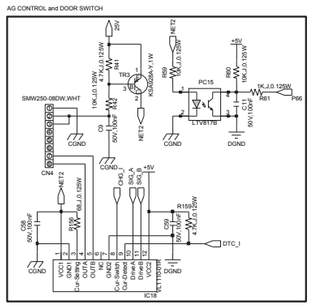

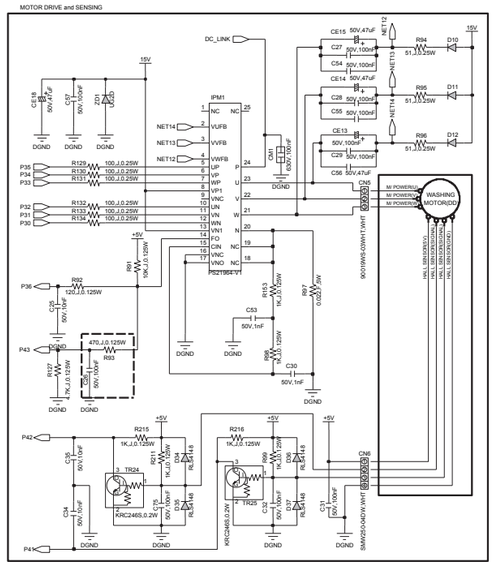

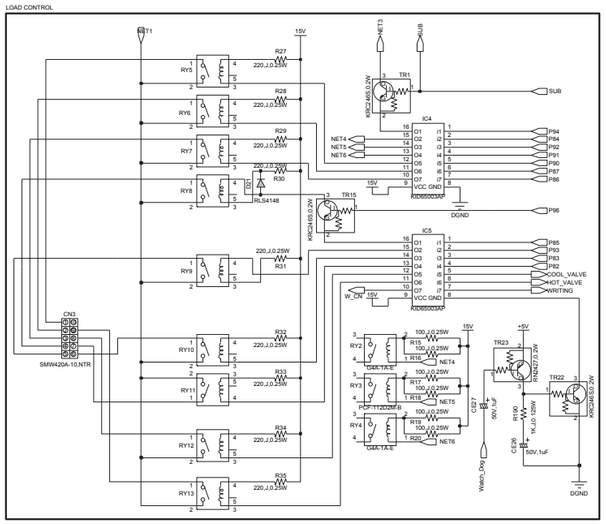

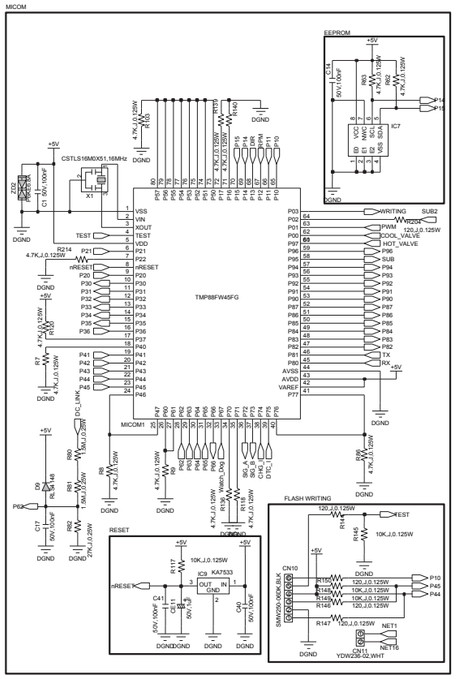

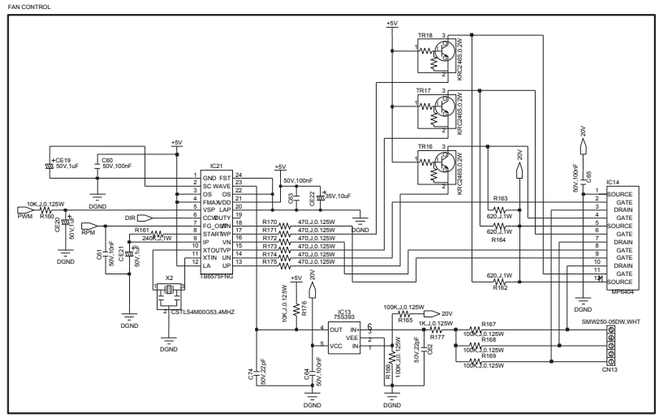

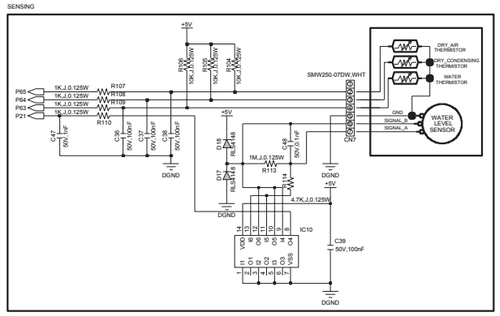

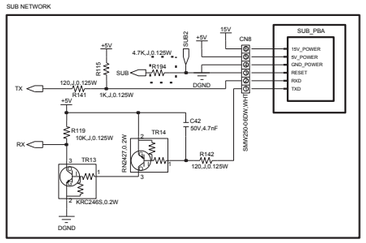

8-2. SUB CONTROL (BEST : WF419***)

► This Document can not be used without Samsungs authorization.

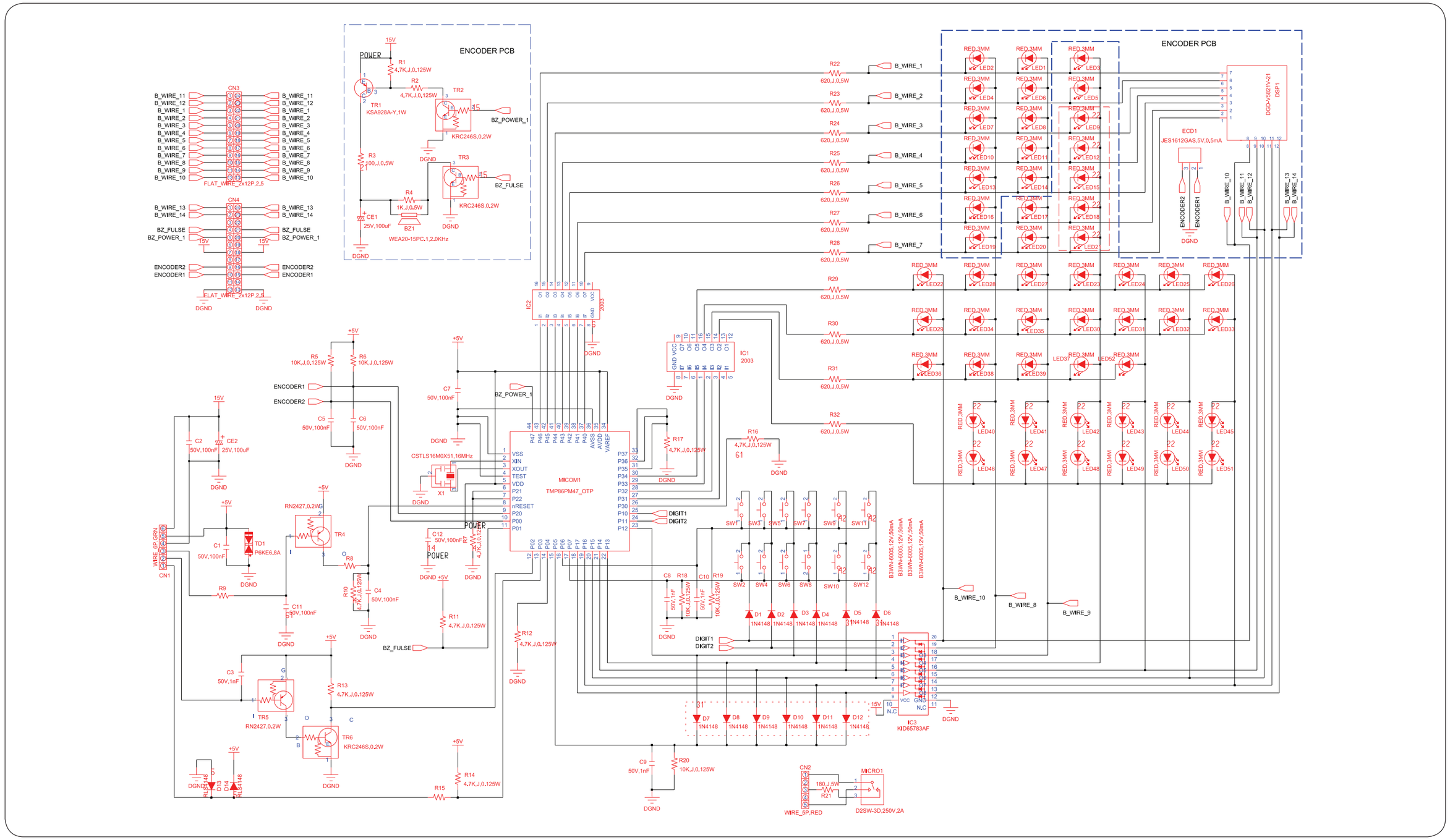

8-3. SUB CONTROL (BETTER : WF409***)
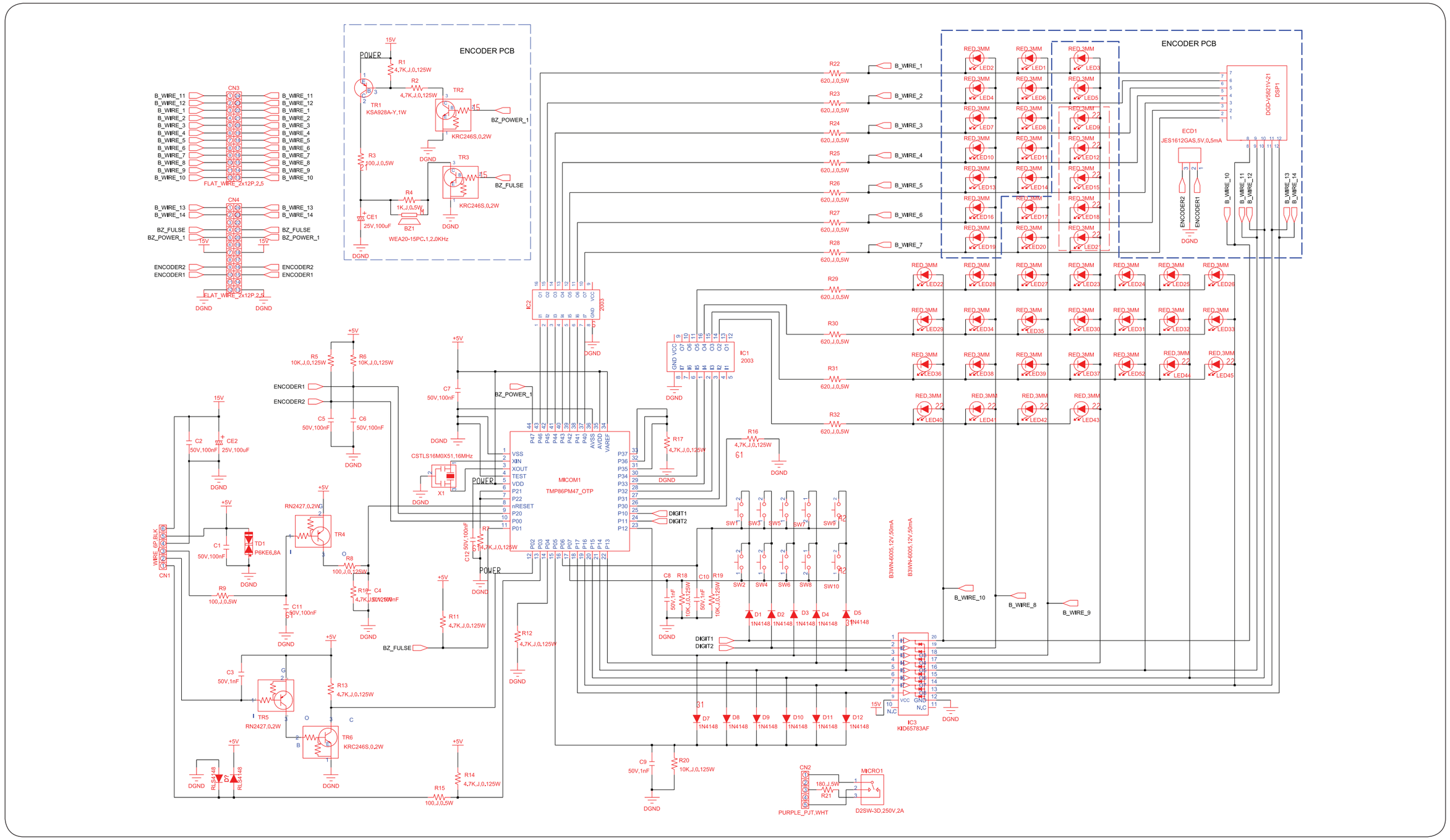
► This Document can not be used without Samsungs authorization.